ELECTRICAL GENERAL NOTES

A. SUPPLEMENTAL GENERAL CONDITIONS
1. THE DRAWINGS ARE GENERALLY DIAGRAMMATIC AND IT IS THE INTENT AND MEANING OF THE CONTRACT DOCUMENTS THAT THE CONTRACTOR SHALL PROVIDE AN ELECTRICAL INSTALLATION THAT IS COMPLETE WITH ALL ITEMS AND APPURTENANCES NECESSARY, REASONABLE INCIDENTAL, OR CUSTOMARILY INCLUDED, EVEN THOUGH EACH ITEM IS NOT SPECIFICALLY CALLED OUT OR SHOWN. THE CONTRACTOR SHALL PROVIDE ALL EQUIPMENT, MATERIALS, LABOR, SUPERVISION AND SERVICE NECESSARY TO PROVIDE A COMPLETE, FUNCTIONING ELECTRICAL SYSTEM IN SAFE WORKING ORDER.
2. SYMBOLS FOR VARIOUS ELEMENTS AND SYSTEMS ARE SHOWN ON THE DRAWINGS. SHOULD THERE BE ANY DOUBT REGARDING THE MEANING OR INTENT OF THE SYMBOLS USED, AN INTERPRETATION SHALL BE OBTAINED FROM THE ARCHITECT IN WRITING. THE DECISION OF THE ARCHITECT SHALL BE FINAL.
3. IT SHALL BE THE RESPONSIBILITY OF EACH CONTRACTOR TO EXAMINE THE CONTRACT DOCUMENTS CAREFULLY BEFORE SUBMITTING THEIR BID, WITH ATTENTION TO ERRORS, OMISSIONS, CONFLICTS WITH PROVISIONS OF LAWS AND CODES HAVING JURISDICTION, CONFLICTS BETWEEN DRAWINGS OR DRAWINGS AND SPECIFICATIONS, AND AMBIGUOUS DEFINITION OF THE EXTENT OF COVERAGE BETWEEN CONTRACTS. ANY SUCH DISCREPANCY SHALL BE BROUGHT IMMEDIATELY TO THE ATTENTION OF THE ARCHITECT FOR CORRECTION. SHOULD ANY OF THESE ERRORS, OMISSIONS, CONFLICTS, OR AMBIGUITIES EXIST, THE CONTRACTOR SHALL HAVE THEM EXPLAINED AND ADJUSTED IN WRITING BEFORE SIGNING THE CONTRACT OR PROCEEDING WITH THE WORK; OTHERWISE, THE CONTRACTOR SHALL, AT THEIR OWN EXPENSE, SUPPLY THE PROPER MATERIALS AND LABOR TO MAKE GOOD ANY DAMAGE OR DEFECTS IN THEIR WORK OR THE RESULTS OBTAINED THEREFROM, CAUSED BY SUCH DISCREPANCY.
4. WHEREVER CONFLICTS OCCUR BETWEEN DIFFERENT PARTS OF THE CONTRACT DOCUMENTS, THE GREATER QUANTITY, THE BETTER QUALITY, OR LARGER SIZE SHALL PREVAIL UNLESS THE ARCHITECT INFORMS THE CONTRACTOR OTHERWISE IN WRITING.
5. THE SCALE OF EACH DRAWING IS RELATIVELY ACCURATE; ANY DIMENSIONS SHOWN ARE APPROXIMATE TO CENTERLINE FROM ASSUMED BUILDING PERIMETER. THE CONTRACTOR SHALL OBTAIN THE NECESSARY DIMENSIONS FOR ANY EXACT TAKEOFFS FROM THE ARCHITECT. NO ADDITIONAL COST TO THE OWNER WILL BE CONSIDERED FOR FAILURE TO OBTAIN EXACT DIMENSIONS WHERE NOT CLEAR OR IN ERROR ON THE DRAWINGS. ANY DEVICE OR FIXTURE ROUGHED IN IMPROPERLY AND NOT POSITIONED ON IMPLIED CENTER-LINES OR AS REQUIRED BY GOOD PRACTICE MUST BE REPOSITIONED AT NO COST TO THE OWNER.
6. THE CONTRACTOR IS RESPONSIBLE FOR FILING AND PAYING ALL FEES AND OBTAINING NECESSARY PERMITS AND CERTIFICATES OF INSPECTION. THE CONTRACTOR SHALL DELIVER ALL CERTIFICATES OF INSPECTION TO OWNER/CONSTRUCTION MANAGER INCLUDING COPIES WITH MAINTENANCE MANUALS.
7. ONLY EXPERIENCED CRAFTSMEN KNOWLEDGEABLE IN THEIR RESPECTIVE TRADE SHALL PERFORM THE WORK DESCRIBED IN THE CONSTRUCTION DOCUMENTS.
8. ALL WORK SHALL BE DONE IN ACCORDANCE WITH THE LATEST ADOPTED EDITIONOF NFPA STANDARD 70 (NATIONAL ELECTRICAL CODE). CONTRACTOR SHALL ALSO CONFORM TO ALL APPLICABLE LOCAL CODES AND AMENDMENTS.
9. UNLESS OTHERWISE INDICATED, ALL EQUIPMENT AND MATERIALS SHALL BE NEW AND SHALL MEET NEMA AND ANSI STANDARDS. THEY SHALL ALSO BE LISTEDLABELED BY A NATIONALLY RECOGNIZED LABORATORY IN ACCORDANCE WITH NFPA 70. EQUIPMENT AND MATERIALS SHALL BE INSTALLED IN ACCORDANCE WITH MANUFACTURER'S RECOMMENDATIONS, AND WITHIN THEIR LISTINGLABELING REQUIREMENTS AND RESTRICTIONS.
10. PROVIDE SHOP DRAWINGS FOR ENGINEER'S REVIEW FOR ALL ELECTRICAL EQUIPMENT, DEVICES, AND MATERIALS PROPOSED TO BE PROVIDED UNDER THIS CONTRACT. ANY DEVIATIONS FROM ITEMS SPECIFIED SHALL BE CLEARLY IDENTIFIED AND SEPARATELY SUBMITTED WITH A FORMAL SUBSTITUTION REQUEST. REFER TO SPECIFICATIONS (PROJECT MANUAL) FOR REQUIREMENTS.

B. ELECTRICAL EQUIPMENT
1. PROVIDE AN IDENTIFICATION NAMEPLATE FOR EACH ELECTRICAL EQUIPMENT, APPURTENANCE DEPICTING THE DESIGNATION INDICATED ON THE DRAWINGS. REFER TO SPECIFICATIONS FOR FURTHER REQUIREMENTS.
2. WEATHERPROOF ENCLOSURES SHALL BE PROVIDED FOR ALL ELECTRICAL EQUIPMENT, DEVICES AND APPURTENANCES (ALL SYSTEMS) INSTALLED OUTDOORS.
3. COORDINATE AND SCHEDULE ALL POWER OUTAGES WITH OWNER. REFER TO SPECIFICATIONS FOR FURTHER REQUIREMENTS.
4. SPACE ALLOCATIONS FOR MATERIALS, EQUIPMENT AND DEVICES HAVE BEEN MADE BASED ON PRESENT AND KNOWN FUTURE REQUIREMENTS AND THE DIMENSIONS OF ITEMS OF EQUIPMENT OR DEVICES OF A PARTICULAR MANUFACTURER. THE CONTRACTOR SHALL VERIFY THAT ALL MATERIALS, EQUIPMENT AND DEVICES PROPOSED FOR USE ON THIS PROJECT ARE WITHIN THE CONSTRAINTS OF THE ALLOCATED SPACE.
5. DO NOT USE PERMANENT INK WHEN MAKING FIELD MARKINGS OR TEMPORARY CIRCUIT LABELS ON PANELS. CONTRACTOR SHALL USE REMOVABLE TAPE/TAGS FOR ALL TEMPORARY MARKINGS AND SHALL REMOVE THESE TEMPORARY MARKINGS AT THE CONCLUSION OF THIS PROJECT.
6. PROVIDE TYPE WRITTEN CIRCUIT DIRECTORIES FOR ALL CIRCUITS WITH LOAD DEFINITIONS FOR EACH PANELBOARD. DIRECTORY SHALL BE LOCATED INSIDE PANEL DOOR. SPARES AND SPACES WITHIN PANELBOARDS SHALL BE LEFT BLANK IN CIRCUIT DIRECTORY.
7. SPARE BREAKERS WITHIN PANELS SHALL BE LEFT IN THE OPEN POSITION.

C. SPECIAL SYSTEMS (i.e. DATA/PHONE/SECURITY/CATV)
1. CONTRACTOR SHALL PROVIDE AND INSTALL AN EMPTY CONDUIT RACEWAY SYSTEM FOR SPECIAL SYSTEM. IT SHALL BE THE CONTRACTOR'S RESPONSIBILITY TO OBTAIN VENDOR SHOP DRAWINGS FROM THE VENDORINSTALL PRIOR TO ELECTRICAL ROUGH-IN. CONTRACTOR SHALL COORDINATE, PROVIDE AND INSTALL ALL REQUIRED RACEWAYS AND DEVICE BACK BOXES AS REQUIRED BY VENDOR SHOP DRAWINGS. CONTRACTOR TO PROVIDE A LINE ITEM ALLOWANCE IN BID AS NECESSARY TO COVER THIS SCOPE.

D. CONDUIT & RACEWAY
1. ALL WORK SHALL BE COORDINATED SO THAT INTERFERENCES ARE AVOIDED. PROVIDE ALL NECESSARY OFFSETS IN CONDUITS, RACEWAYS, ETC., REQUIRED TO PROPERLY INSTALL THE WORK. EXPOSED WORK MUST BE KEPT AS CLOSE AS POSSIBLE TO WALLS, CEILINGS, COLUMNS, ETC., SO AS TO TAKE UP MINIMUM AMOUNT OF SPACE; ALL OFFSETS, FITTINGS, ETC., REQUIRED SHALL BE PROVIDED WITHOUT ADDITIONAL EXPENSE TO THE OWNER. WORK SHALL BE COORDINATED WITH OTHER TRADES.
2. CONDUIT RUNS ARE DIAGRAMMATIC IN NATURE. CONTRACTOR IS RESPONSIBLE FOR SIZING AND LOCATING PULL BOXES PER NFPA 70 AND FOR COORDINATION WITH OTHER DISCIPLINES.
3. CONDUIT RUNS ARE DIAGRAMMATIC IN NATURE. CONTRACTOR IS RESPONSIBLE FOR SIZING AND LOCATING PULL BOXES PER NFPA 70 AND FOR COORDINATION WITH OTHER DISCIPLINES.
4. PENETRATIONS OF WALLS, FLOORS, AND ROOFS FOR THE PASSAGE OF ELECTRICAL RACEWAYS SHALL BE APPROVED BY THE STRUCTURAL ENGINEER OF RECORD PRIOR TO THE COMMENCEMENT OF WORK. ALL SUCH PENETRATIONS SHALL BE PROPERLY SEALED OFF AFTER INSTALLATION OF RACEWAY SO AS TO MAINTAIN THE STRUCTURAL, WATER PROOF, AND FIRE PROOF INTEGRITY OF THE WALL, FLOOR, OR ROOF SYSTEM PENETRATED.
5. SEAL ALL CONDUITS THAT PENETRATE THE BASEMENT FLOOR SLAB TO MAKE THEM WATER TIGHT. THE CONDUITS SHALL BE DRIED PRIOR TO INSTALLATION OF WIRE/CABLE AND SHALL BE SEALED AT TERMINATIONS.
6. ALL PENETRATIONS THROUGH FIRE RATED WALLS OR PARTITIONS SHALL BE MADE IN ACCORDANCE WITH U.L. "FIRE RESISTANCE DIRECTORY". PENETRATIONS SHALL BE SLEEVED AND SEALED WITH A UL APPROVED FIRE RATED SEALANT. REFER TO ARCHITECTURAL PLANS FOR FIRE RATED WALLS.
7. ALL EMPTY CONDUIT SYSTEMS SHALL CONTAIN A PULL WIRE FOR FUTURE PULLING OF CONDUCTORS.

E. BRANCH CIRCUITS AND FEEDERS
1. CIRCUITING IS SHOWN DIAGRAMMATICALLY. HOMERUNS SHALL BE COMBINED WHERE POSSIBLE ACCORDING TO NFPA 70.
2. **UNLESS OTHERWISE INDICATED, ALL CIRCUITS 100' OR LESS SHALL BE MINIMUM #12 AWG WIRE SIZE. CIRCUITS OVER 100' BUT LESS THAN 200' SHALL BE MINIMUM #10 AWG WIRE SIZE. CIRCUITS OVER 200' BUT LESS THAN 300' SHALL BE MINIMUM #8 AWG WIRE SIZE.**
3. UNLESS OTHERWISE INDICATED, ALL CONDUCTORS SHALL BE COPPER, 98% CONDUCTIVITY CONTINUOUS FROM OUTLET TO OUTLET.
4. UNLESS OTHERWISE INDICATED, CONDUCTOR SIZES #12 AWG AND #10 AWG SHALL BE SOLID. CONDUCTOR SIZES #8 AWG AND LARGER MAY BE STRANDED.
5. A SEPARATE INSULATED EQUIPMENT GROUNDING CONDUCTOR SHALL BE PULLED WITH THE CIRCUIT CONDUCTORS FOR GROUNDING WHETHER OR NOT INDICATED ON THE DRAWINGS. METAL RACEWAY, OR A CABLE ARMOR OR SHEATH SHALL NOT BE USED AS THE ONLY EQUIPMENT GROUNDING CONDUCTOR.
6. HOMERUN CIRCUITS FOR ISOLATED GROUND RECEPTACLES SHALL BE SEPARATED FROM OTHER CIRCUITS. EACH CIRCUIT SHALL HAVE ITS OWN NEUTRAL CONDUCTOR AND EACH HOMERUN SHALL CONTAIN AN ISOLATED AND EQUIPMENT GROUND CONDUCTOR.

F. WIRING DEVICES
1. REFER TO ARCHITECTURAL DRAWINGS AND SPECIFICATIONS FOR LOCATION AND MOUNTING HEIGHT OF ALL WALL AND FLOOR MOUNTED ELEMENTS (OUTLETS, LIGHT SWITCHES, CONTROLLERS, POKE-THRU, ETC). ALL WALL/FLOOR MOUNTED ITEMS SHALL BE INSTALLED IN ACCORDANCE WITH THE ARCHITECTURAL DIMENSIONED DRAWINGS. IF LOCATION FOR AN ITEM IS NOT SHOWN ON THE ARCHITECTURAL DRAWINGS, VERIFY THE EXACT LOCATION OF THE ITEM WITH THE ARCHITECT PRIOR TO INSTALLATION. THESE REQUIREMENTS APPLY TO ALL WALL/FLOOR TYPES IN ALL AREAS. DO NOT SCALE OR DIMENSION LOCATIONS FROM THESE DRAWINGS.
2. COORDINATE THE LOCATION AND INSTALLATION DETAIL OF OUTLETS IN MILLWORK WITH ARCHITECTURAL DRAWINGS (WALL ELEVATIONS, MILLWORK DETAILS, ETC.) AND WITH MILLWORK MANUFACTURER PRIOR TO ELECTRICAL ROUGH-IN.
3. WALL AND FLOOR MOUNTED POWER RECEPTACLES SHOWN NEAR DATA OUTLETS SHALL BE LOCATED WITHIN SIX (6) INCHES OF THE DATA OUTLET. LOCATE AT SAME MOUNTING HEIGHT UNLESS NOTED OTHERWISE.
4. VERIFY THE EXACT POWER CONNECTION TYPE AND NEMA CONFIGURATION OF RECEPTACLES FOR EQUIPMENT FURNISHED BY THE OWNER, OTHER TRADES, OR UNDER A SEPARATE SECTION OF THIS CONTRACT PRIOR TO ELECTRICAL ROUGH-IN.
5. ALL RECEPTACLES LOCATED OUTSIDE THE BUILDING ENVELOPE SHALL BE HOUSED IN ENCLOSURES THAT ARE RATED 'WEATHER-PROOF-WHILE-IN-USE' AND SHALL BE EQUIPPED WITH GFCI FOR PERSONNEL PROTECTION.
6. ALL GFCI RECEPTACLES SHALL BE CONNECTED SO THAT ALL DEVICES ON THE SAME CIRCUIT AS THE GFCI RECEPTACLE DO NOT DE-ENERGIZE UPON TRIPPING. ALL GFCI RECEPTACLES SHALL INCLUDE A LOCK-OUT FUNCTION TO PROTECT AGAINST THE USE OF MISWIRED DEVICES OR DEVICES THAT HAVE BEEN DAMAGED DUE TO DISABLING SURGES.

G. LIGHTING SYSTEM
1. REFER TO ARCHITECTURAL DRAWINGS AND SPECIFICATIONS FOR LOCATION OF ALL CEILING ELEMENTS (LIGHTS, SPRINKLERS, DIFFUSERS, ETC). ALL CEILING MOUNTED ITEMS SHALL BE INSTALLED IN ACCORDANCE WITH THE ARCHITECTURAL DIMENSIONED DRAWINGS. IF LOCATION FOR AN ITEM IS NOT SHOWN ON THE ARCHITECTURAL DRAWINGS, VERIFY THE EXACT LOCATION OF THE ITEM WITH THE ARCHITECT PRIOR TO INSTALLATION. THESE REQUIREMENTS APPLY TO ALL CEILING TYPES IN ALL AREAS. DO NOT SCALE OR DIMENSION LOCATIONS FROM THESE DRAWINGS.
2. PROVIDE AND INSTALL ALL SUPPORTS FOR LIGHT FIXTURES. SUPPORTS SHALL BE INDEPENDENT OF THE CEILING GRID SUPPORT SYSTEM.
3. LIGHT SWITCHES / OCCUPANCY SENSORS LOCATED IN A ROOM SHALL CONTROL ALL THE LIGHT FIXTURES IN THAT ROOM UNLESS NOTED OTHERWISE. CONTRACTOR SHALL GANG TOGETHER ALL SWITCHES/DIMMERS UNDER A SINGLE COVER PLATE IN ALL AREAS THAT REQUIRE MORE THAN ONE SWITCH TO CONTROL ELECTRICAL DEVICES.
4. IN INSTANCES WHERE A TRACK LIGHTING SYSTEM, DIMMING SYSTEM, AND/OR LIGHTING CONTROL SYSTEM IS SPECIFIED, THE CONTRACTOR SHALL COORDINATE ALL NECESSARY COMPONENTS OF SUCH SYSTEM(S) WITH THE MANUFACTURER PRIOR TO BID AND INCLUDE ALL NECESSARY ACCESSORIES TO INSTALL A COMPLETE AND FUNCTIONING SYSTEM.
5. THE EXACT LOCATIONS AND QUANTITIES OF PHOTOSENSORS SHALL BE DETERMINED IN THE FIELD; REFER TO MANUFACTURER'S INSTALLATION INSTRUCTIONS PRIOR TO INSTALLATION FOR MANUFACTURER'S RECOMMENDED PLACEMENT. LOCATE SENSORS IN THE CORRECT LOCATION REQUIRED FOR THE PROPER COVERAGE OF CONTROLLED AREAS AND TO MINIMIZE INTERFERENCE FROM OTHER LIGHT SOURCES.
6. ROOMS OR SPACES INDICATED ON FLOOR PLANS OR LIGHTING CONTROL SCHEDULES TO BE PROVIDED WITH PHOTOSENSOR SHALL BE PROVIDED WITH DAYLIGHT CONTROLS. PROVIDE DAYLIGHT CONTROLLER, DIMMING BALLASTS, DIMMING DRIVERS, DIMMING CONTROL WALL STATIONS, AND LOW-VOLTAGE CONTROL WIRING REQUIRED FOR COMPLETE AND OPERATIONAL AUTOMATIC, DAYLIGHT RESPONSIVE DIMMING CONTROL.
7. THE LOCATIONS AND QUANTITIES OF OCCUPANCY SENSORS INDICATED ON THE DRAWINGS ARE DIAGRAMMATIC AND INDICATE ONLY THAT THE ROOMS ARE TO BE PROVIDED WITH OCCUPANCY SENSORS. THE EXACT LOCATIONS AND QUANTITIES SHALL BE DETERMINED AT THE BUILDING; REFER TO MANUFACTURER'S INSTALLATION INSTRUCTIONS PRIOR TO INSTALLATION FOR MANUFACTURER'S RECOMMENDED PLACEMENT. LOCATE AND AIM OCCUPANCY SENSORS IN THE CORRECT LOCATION REQUIRED FOR THE COMPLETE AND PROPER VOLUMETRIC COVERAGE WITHIN THE RANGE OF COVERAGES OF CONTROLLED AREAS PER THE MANUFACTURER'S RECOMMENDATIONS. ROOMS SHALL HAVE 90% TO 100% COVERAGE OF THE CONTROLLED AREA TO ACCOMMODATE OCCUPANCY HABITS OF SINGLE OR MULTIPLE OCCUPANTS AT ANY LOCATION WITHIN THE ROOMS. PROVIDE ADDITIONAL OCCUPANCY SENSORS IF REQUIRED TO PROPERLY AND COMPLETELY COVER THE RESPECTIVE ROOM AT NO ADDITIONAL COST TO THE OWNER.

H. MECHANICAL & PLUMBING COORDINATION
1. REFERENCE THE MECHANICAL AND PLUMBING DRAWINGS FOR ALL EQUIPMENT NEEDING ELECTRICAL CONNECTIONS. MAKE ALL CONNECTIONS AND PROVIDE APPROPRIATE WIRE, CONDUIT, AND OVERCURRENT PROTECTION FOR ALL EQUIPMENT.
2. VERIFY EXACT LOCATION OF ALL POWER CONNECTIONS AND CONTROL DEVICES WITH OTHER TRADES AND MANUFACTURERS SHOP DRAWINGS BEFORE CONSTRUCTION. COORDINATE ALL REQUIRED ENERGY MANAGEMENT SYSTEM POINTS AND CONTACT CONNECTIONS TO ENSURE THE COMPLETE AND PROPER OPERATION OF ALL SYSTEMS.
3. ALL FUSED SWITCHES AND/OR CIRCUIT BREAKERS SERVING EQUIPMENT SHALL HAVE PROVISIONS FOR HANDLE LOCKS.
4. ALL CIRCUIT BREAKERS SERVING MECHANICAL EQUIPMENT SHALL BEAR AN 'HACR' RATING.
5. ALL DISCONNECTS DOWN STREAM OF VFDs SHALL BE PROVIDED WITH AUXILIARY CONTACTS TO SHUT DOWN UPSTREAM VFD WHEN SWITCH IS OPENED.
6. COORDINATE BETWEEN TRADES AND PROVIDE CONTROL POWER FOR ALL VAV BOXES/DAMPERS/ETC, AS REQUIRED TO ENSURE A COMPLETE, FULLY FUNCTIONAL HVAC SYSTEM. SHOULD AN EXACT CIRCUIT NUMBER NOT BE INDICATED ON ELECTRICAL DRAWINGS, CONTRACTOR SHALL UTILIZE AVAILABLE 20A/1P SPACE FROM THE NEAREST 208V/120V PANEL OR FROM BUILDING CONTROL POWER DISTRIBUTION SYSTEM.

ELECTRICAL GENERAL NOTES

A. THE POWER RATINGS OF MECHANICAL, PLUMBING, AND FIRE SUPPRESSION SYSTEM MOTORS AND EQUIPMENT AND THE CHARACTERISTICS OF ELECTRICAL SYSTEMS SERVING THEM, AS SPECIFIED IN OTHER DIVISIONS, HAVE BEEN ESTABLISHED AS MINIMUMS WHICH WILL ALLOW THAT EQUIPMENT TO SATISFACTORILY FUNCTION WHILE PRODUCING THE CAPACITIES INDICATED ON THE DRAWINGS OR SPECIFIED HEREIN. THESE POWER RATINGS INCLUDE A SAFETY FACTOR DEEMED APPROPRIATE TO ACCOMMODATE COMMON DIFFERENCES BETWEEN DESIGN PARAMETERS AND FIELD CONSTRUCTION PRACTICES.

B. REASONABLE EFFORTS HAVE BEEN MADE TO COORDINATE THE ELECTRICAL REQUIREMENTS OF THE EQUIPMENT SPECIFIED IN OTHER DIVISIONS WITH THE ELECTRICAL SYSTEMS SERVING THAT EQUIPMENT. DIFFERENCES AMONG MANUFACTURERS OF EQUIPMENT MAKE IT IMPOSSIBLE TO PRODUCE A SINGLE ELECTRICAL DESIGN WHICH WILL SATISFY THE VARYING ELECTRICAL REQUIREMENTS OF THOSE MANUFACTURERS. CONSEQUENTLY, THE CONTRACTORSHALL COORDINATE THE ELECTRICAL REQUIREMENTS OF THE EQUIPMENT ACTUALLY FURNISHED ON THIS PROJECT AND PROVIDE THE ELECTRICAL SYSTEMS REQUIRED BY THAT EQUIPMENT. THIS COORDINATION EFFORT SHALL BE COMPLETED PRIOR TO THE INSTALLATION OF EITHER THE EQUIPMENT OR THE ELECTRICAL SYSTEMS SERVING THAT EQUIPMENT. ELECTRICAL SYSTEM REVISIONS REQUIRED TO COORDINATE WITH THE EQUIPMENT ACTUALLY FURNISHED SHALL BE PROVIDED AT NO ADDITIONAL COST TO THE OWNER.

C. EXISTING CONDITIONS TO REMAIN. ALL NEW WORK INSTALLED TO MEET CURRENT CODE REQUIREMENTS. PRELIMINARY ANNOTATIVE SET WAS REVIEWED WITH CITY OF ATLANTA ON 03/08/2022 BEFORE SUBMITTING FOR PERMIT.

D. CONVERGIN, MITEC, AND LOW VOLTAGE WIRING ADDED BY OWNER.

ELECTRICAL ABBREVIATIONS

AFC	ABOVE FINISHED COUNTER	MCC	MOTOR CONTROL CENTER
AFF	ABOVE FINISHED FLOOR	MDP	MAIN DISTRIBUTION PANEL
AHJ	AUTHORITY HAVING JURISDICTION	MH	MANHOLE
ATS	AUTOMATIC TRANSFER SWITCH	MLO	MAIN LUGS ONLY
BFC	BELOW FINISHED CEILING	MTD	MOUNT OR MOUNTED
BOF	BOTTOM OF FIXTURE	MW	MICROWAVE
C	CONDUIT	N	NEW DEVICE
CB,C/B OR CKT BKR	CIRCUIT BREAKER	NC (N.C.)	NORMALLY CLOSED
		NEC	NATIONAL ELECTRIC CODE
CKT	CIRCUIT	NF	NONFUSED
CCTV	CLOSED CIRCUIT TV	NIC	NOT IN CONTRACT
CLG	CEILING	NL	NIGHT LIGHT
CR	CRITICAL (EMERGENCY SYSTEM)	NO (N.O.)	NORMALLY OPEN
CUH	CABINET HEATER	PB	PULL BOX
EC	EMPTY CONDUIT	PLGMLD	PLUGMOLD
ELEC	ELECTRIC	PNL	PANEL
E	EMERGENCY	PWR	POWER
EMS	ENERGY MANAGEMENT SYSTEM	R	RECEPTACLE DEVICE
EP	EXPLOSION PROOF	RCPT(S) OR RECEPT	RECEPTACLE(S)
EWC	ELECTRIC WATER COOLER		
EX	EXISTING	REF	REFRIGERATOR
F	FUSE	RF	RETURN AIR FAN
F*	FUSED PER MANUFACTURER'S REQUIREMENTS	SEF	SMOKE EXHAUST FAN
		SF	SUPPLY AIR FAN
FA	FIRE ALARM	SO (S.O.)	SPACE ONLY
FACP, FAP	FIRE ALARM CONTROL PANEL	SP	SPARE
FCU	FAN COIL UNIT	ST (S.T.)	SHUNT TRIP
FIXT	FIXTURE	SW	SWITCH
FLR	FLOOR	TEL	TELEPHONE
FLUOR	FLUORESCENT	TF	TRANSFER FAN
FTP, FTS OR FTU	FAN TERMINAL UNIT	TP	TAMPER PROOF
		TV	TELEVISION
FUT	FUTURE	TVSS	TRANSIENT VOLTAGE SURGE SUPPRESSION
G, GND	GROUND (EQUIPMENT)		
GEF	GENERAL EXHAUST FAN	UF	UNDERFLOOR
GEN	GENERATOR	UG	UNDERGROUND
GFCI, GFI	GROUND FAULT CIRCUIT INTERRUPTER	UH	UNIT HEATER
HP	HORSE POWER	UNO (U.N.O.)	UNLESS NOTED OR INDICATED OTHERWISE
HV	HIGH VOLTAGE		
HWAT	HEAT TRACE	V	VOLTAGE
IC	INTERRUPTING CAPACITY	VFD	VARIABLE FREQUENCY DRIVE
ICAND	INCANDESCENT	VP	VAPOR PROOF
IG	ISOLATED GROUND	VV	VARIABLE VOLUME UNIT
IGF	GROUND FAULT INDICATION ONLY	W	WIRE
JB	JUNCTION BOX	W/	WITH
KEF	KITCHEN EXHAUST FAN	WG	WIRE GUARD
LTG	LIGHTING	WP	WEATHER PROOF
LTS	LIGHTS	WT	WATER TIGHT
LV	LOW VOLTAGE	XFMR	TRANSFORMER MOUNTING
MATV	MASTER ANTENNA	+XX	HEIGHT IN INCHES. AFF UNO.
MCB	MAIN CIRCUIT BREAKER	UCR	UNDER CABINET REFRIGERATOR

POWER SYMBOLS LEGEND

ALL SYMBOLS SHOWN MAY NOT APPEAR IN ALL DRAWINGS. SYMBOLS ARE SHOWN SCHEMATIC AND MAY NOT BE TO SCALE.

SYMBOL	DESCRIPTION	MNTG. HT. UNO
	SWITCHBOARD OR SWITCHGEAR. DOUBLE LINE INDICATES FRONT.	--
	480Y/277V DISTRIBUTION PANELBOARD, SURFACE-MOUNTED.	--
	208Y/120V DISTRIBUTION PANELBOARD, SURFACE-MOUNTED.	--
	480Y/277V PANELBOARD.	--
	208Y/120V PANELBOARD.	--
	ISOLATION PANEL.	--
T	STEP-DOWN TRANSFORMER.	--
	AUTOMATIC TRANSFER SWITCH.	--
	BY-PASS / ISOLATION AUTOMATIC TRANSFER SWITCH.	--
MGB / PG / RG	GROUND BAR. ("MGB" = MAIN GROUND BAR, "PG" = PATIENT GROUND BAR, "RG" = ROOM GROUND BAR)	--
GAP	GENERATOR ANNUNCIATOR PANEL.	AS REQUIRED
ATSA	AUTOMATIC TRANSFER SWITCH ANNUNCIATOR PANEL.	AS REQUIRED
TVSS	TRANSIENT VOLTAGE AND SURGE SUPPRESSOR DEVICE.	AS REQUIRED
AAP	AREA ALARM PANEL.	AS REQUIRED
FOAP	FUEL OIL ALARM PANEL.	AS REQUIRED
MGAP	MEDICAL GAS ALARM PANEL - PANEL PROVIDED UNDER DIV 15.	AS REQUIRED
DHTA	DECONTAMINATION HOLDING TANK ALARM - PANEL PROVIDED UNDER OTHER DIVISION.	AS REQUIRED
W/X/Y/Z	FUSED DISCONNECT SWITCH (W=FRAME SIZE, X=NUMBER OF POLES, Y=FUSE SIZE, Z=ENCLOSURE TYPE IF OTHER THAN NEMA 1).	AS REQUIRED
X/Y/Z	NON-FUSED DISCONNECT SWITCH (X=FRAME SIZE, Y=NUMBER OF POLES, Z=ENCLOSURE TYPE IF OTHER THAN NEMA 1).	AS REQUIRED
X/Y/Z	ENCLOSED CIRCUIT BREAKER (X=TRIP RATING, Y=NUMBER OF POLES, Z=ENCLOSURE TYPE IF OTHER THAN NEMA 1).	AS REQUIRED
	STARTER / CONTROLLER. REFER TO EQUIPMENT CONNECTION SCHEDULE(S) FOR ADDITIONAL REQUIREMENTS, UON.	AS REQUIRED
	COMBINATION CONTROLLER / STARTER AND DISCONNECT SWITCH. REFER TO EQUIPMENT CONNECTION SCHEDULE(S) AND FOR ADDITIONAL REQUIREMENTS, UON.	AS REQUIRED
	VARIABLE SPEED DRIVE.	AS REQUIRED
$_M$	30A SINGLE POLE MOTOR RATED SWITCH	AS REQUIRED
$_{ADA}$	DISABLED PUSH BUTTON FOR ADA DOOR.	AS REQUIRED
$_{MD}$	MOTORIZED DOOR CONTROLLER (FURNISHED WITH DOOR).	AS REQUIRED
$_{MS}$	MOTORIZED SHADE CONTROLLER (FURNISHED WITH SHADES).	AS REQUIRED
$_{PS}$	PROJECTION SCREEN CONTROLLER (FURNISHED WITH SCREEN).	AS REQUIRED
	EMERGENCY POWER OFF SWITCH WITH CLEAR PLASTIC COVER. LABEL COVER "EMERGENCY POWER SHUTDOWN" IN RED COLOR.	66" AFF
	SINGLE RECEPTACLE - 20A/125V/2P/3W/G NEMA 5-20R.	18" AFF
	DUPLEX RECEPTACLE - 20A/125V/2P/3W/G NEMA 5-20R WITH ONE TYPE A AND ONE TYPE C USB CONNECTOR.	18" AFF
	DUPLEX RECEPTACLE - 20A/125V/2P/3W/G NEMA 5-20R.	18" AFF
	DUPLEX RECEPTACLE MOUNTED ABOVE COUNTERTOP.	8" AFC OR 42" AFF
	QUADRAPLEX RECEPTACLE (TWO DUPLEX RECEPTACLES UNDER ONE COVERPLATE).	18" AFF
	QUADRAPLEX RECEPTACLE MOUNTED ABOVE COUNTERTOP.	8" AFC OR 42" AFF
	DUPLEX RECEPTACLE GFCI - 20A/125V/2P/3W/G NEMA 5-20R.	18" AFF
	DUPLEX RECEPTACLE GFCI MOUNTED ABOVE COUNTERTOP.	8" AFC OR 42" AFF
	QUADRAPLEX RECEPTACLE GFCI (TWO DUPLEX RECEPTACLES GFCI UNDER ONE COVERPLATE).	18" AFF
	DUPLEX RECEPTACLE - 20A/125V/2P/3W/G NEMA 5-20R. FOR TV/DISPLAY. COORDINATE EXACT LOCATION AND MOUNTING HEIGHT WITH ARCHITECTURAL INTERIOR ELEVATIONS.	--
	DUPLEX RECEPTACLE.	CEILING MOUNTED
	DUPLEX RECEPTACLE, FLUSH MOUNTED IN FLOORBOX WITH COVERPLATE.	FLOOR MOUNTED
	SPECIAL OUTLET - 30A/250V/2P/3W/G NEMA L6-30R, UON ON FLOORPLANS.	18" AFF
	SPECIAL OUTLET - 30A/250V/2P/3W/G NEMA L6-30R, UON ON FLOORPLANS.	CEILING MOUNTED
	COMBINATION RECEPTACLE/COMMUNICATIONS OUTLET POKE-THROUGH FITTING WITH 2 DUPLEX RECEPTACLES AND 3 SINGLE GANG OPENINGS FOR IT/AV.	FLOOR MOUNTED
	COMBINATION RECEPTACLE/COMMUNICATIONS OUTLET FLOOR BOX WITH 2 DUPLEX RECEPTACLES AND 3 SINGLE GANG OPENINGS FOR IT/AV.	FLOOR MOUNTED
	JUNCTION BOX FOR CONNECTION TO PRE-WIRED SYSTEMS FURNITURE. COORDINATE CONNECTION REQUIREMENTS WITH SYSTEMS FURNITURE PROVIDER.	18" AFF
	POKE-THROUGH FOR CONNECTION TO PRE-WIRED SYSTEMS FURNITURE. COORDINATE REQUIREMENTS WITH SYSTEMS FURNITURE PROVIDER.	FLOOR MOUNTED
	FLOOR BOX FOR CONNECTION TO PRE-WIRED SYSTEMS FURNITURE. COORDINATE REQUIREMENTS WITH SYSTEMS FURNITURE PROVIDER.	FLOOR MOUNTED
	JUNCTION BOX.	18" AFF
	JUNCTION BOX.	CEILING/ ABOVE CEILING
	DOUBLE CHANNEL SURFACE METAL RACEWAY.	PER ARCH. ELEVATIONS
	DUPLEX RECEPTACLE OUTLET, MOUNTED HORIZONTALLY IN RACEWAY.	PER ARCH. ELEVATIONS
	GFCI DUPLEX RECEPTACLE OUTLET, MOUNTED HORIZONTALLY IN RACEWAY.	PER ARCH. ELEVATIONS
	SPECIAL OUTLET (NEMA L6-30R TYPE, UON ON FLOORPLANS), MOUNTED HORIZONTALLY IN RACEWAY.	PER ARCH. ELEVATIONS
	MOTOR CONNECTION.	--
	ELECTRICAL CONNECTION TO EQUIPMENT, WALL MOUNTED.	AS REQUIRED
	ELECTRICAL CONNECTION TO EQUIPMENT.	AS REQUIRED

POWER LEGEND NOTATIONS

MSB	UNDERLINE TEXT INDICATES EQUIPMENT NAME. REFER TO ASSOCIATED ELECTRICAL SCHEDULE FOR ADDITIONAL INFORMATION.
L1A	DENOTES PANELBOARD AND/OR CIRCUIT NUMBER FROM WHICH ALL CIRCUITS WITHIN DESIGNATED AREA OR ROOM SHALL BE SERVED. REFER TO

ELECTRICAL SPECIFICATIONS

A. GENERAL:

1. COMPLY WITH PROVISIONS OF NFPA 70-2020 AND LOCAL CODES. LOCAL CODES AND REGULATIONS SHALL GOVERN IN CASE OF CONFLICT.
2. PROVIDE ACCESS TO EQUIPMENT AND APPARATUS REQUIRING OPERATION, SERVICE OR MAINTENANCE.
3. DO NOT INSTALL PANELBOARDS, POWER PANELS, TRANSFORMERS, OR STARTERS WITHIN 42" HORIZONTALLY, FROM FLOOR TO THE STRUCTURE ABOVE, OF PIPING, DUCTWORK AND MECHANICAL EQUIPMENT.
4. OPENINGS THROUGH FIRE RATED FLOORS AND PARTITIONS SHALL BE SEALED WITH FIRE RATED SEALANT AFTER INSTALLATION OF RACEWAYS IN A MANNER TO MAINTAIN THE FIRE RATING OF THE SEPARATION.
5. THE EXISTING INSTALLATION SHALL REMAIN EXCEPT WHERE OTHERWISE INDICATED OR SPECIFIED.
6. PERFORM ALL WORK NECESSARY TO INTERCONNECT THE NEW WORK WITH THE EXISTING WORK AND TO ADAPT THE EXISTING WORK TO THE CHANGES IN THE BUILDING AND THE SYSTEM.
7. COORDINATE THE INSTALLATION WITH THE STRUCTURE, ARCHITECTURE, AND WORK OF OTHER TRADES TO ELIMINATE CONFLICTS.
8. SHOULD THE INSTALLATION OF NEW DUCTWORK, PIPING OR OTHER EQUIPMENT CONFLICT WITH EXISTING LUMINAIRES AND/OR ELECTRICAL OUTLETS, SHIFT THE LUMINAIRES AND OUTLETS OR MAKE SUCH OTHER CHANGES AS ARE NECESSARY IN THE ELECTRICAL INSTALLATION TO REMEDY THE CONFLICTS, AS APPROVED BY THE ARCHITECT AND AT NO EXTRA COST TO THE OWNER.
9. WHERE EXISTING MECHANICAL EQUIPMENT IS MODIFIED OR RELOCATED, MODIFY THE ELECTRICAL CONNECTIONS TO THE EQUIPMENT TO ADAPT IT TO ITS NEW FUNCTION OR LOCATION.
10. ELECTRICAL MATERIALS SHALL BE NEW AND LISTED BY THE UNDERWRITERS' LABORATORIES, INC. WHEREVER STANDARDS HAVE BEEN ESTABLISHED AND LABEL SERVICE IS REGULARLY FURNISHED BY THIS AGENCY.
11. SHOP DRAWINGS AND CUTS AND/OR DATA TO BE SUBMITTED SHALL INCLUDE THOSE ON THE FOLLOWING ITEMS OF EQUIPMENT OR MATERIALS:
    a. PANELBOARDS
    b. WIRING DEVICES
    c. LUMINAIRES
    d. FIRE ALARM DEVICES PREPARED AND SEALED BY NICET LEVEL III DESIGNER INCLUDING:
        1. LAYOUT OF DEVICES
        2. DEVICE CIRCUITING INFORMATION
        3. VOLTAGE DROP CALCULATIONS
        4. BATTERY CALCULATIONS
12. EACH CIRCUIT BREAKER, PANELBOARD, DISCONNECT SWITCH, OR OTHER DEVICE SHALL HAVE AN IDENTIFYING NAMEPLATE AFFIXED. NAMEPLATES SHALL BE LAMINATED PLASTIC, WHITE ENGRAVED LETTERS ON BLACK BACKGROUND FOR NORMAL POWER SUPPLY AND WHITE ENGRAVED LETTERS ON RED BACKGROUND FOR EMERGENCY POWER SUPPLY. LETTERS SHALL BE 0.25" HIGH.

B. DEMOLITION:

1. EQUIPMENT, APPARATUS, AND EXPOSED WIRING AND RACEWAYS RENDERED USELESS DUE TO CHANGES SHALL BE REMOVED.
2. WHERE EXISTING CEILINGS ARE REMOVED, LUMINAIRES, EXIT SIGNS, AND OTHER ELECTRICAL POWER AND SIGNAL APPARATUS MOUNTED TO THE CEILING OR CEILING SUPPORTS, INCLUDING ASSOCIATED RACEWAYS AND WIRING, SHALL BE REMOVED.
3. MATERIAL AND EQUIPMENT WHICH HAS BEEN REMOVED SHALL NOT BE USED IN THE NEW WORK, EXCEPT AS INDICATED HEREIN.
4. MAINTAIN AND RESTORE, IF INTERRUPTED, ALL CONDUITS AND FEEDERS PASSING THROUGH RENOVATED AREAS AND SERVICING UNDISTURBED AREAS.
5. CONCEALED WIRING AND RACEWAYS WHICH ARE EXPOSED BY THE REMOVAL OF WALLS, PARTITIONS, AND CEILINGS SHALL BE REMOVED. NEW CONCEALED WIRING AND RACEWAYS SERVING EXISTING LOADS PRESENTLY SERVED BY THE REMOVED WIRING AND RACEWAYS SHALL BE PROVIDED.
6. WHERE EXISTING MECHANICAL EQUIPMENT IS REMOVED, ELECTRIC WIRING, RACEWAYS, SWITCHES AND STARTERS ASSOCIATED WITH THE EQUIPMENT SHALL BE REMOVED.
7. WHERE EXISTING MECHANICAL EQUIPMENT IS MODIFIED OR RELOCATED, ELECTRICAL CONNECTIONS TO THE EQUIPMENT SHALL BE MODIFIED TO ADAPT THEM TO THEIR NEW FUNCTION OR LOCATION.
8. EXISTING LUMINAIRES REMOVED AND NOT REUSED ELSEWHERE SHALL REMAIN THE PROPERTY OF THE OWNER AND SHALL BE STORED ON THE PREMISES AS DIRECTED.
9. APPARATUS, WIRING, CONDUIT, AND METAL MOLDING RENDERED USELESS DUE TO CHANGES IN THE EXISTING BUILDING SHALL BE REMOVED WHERE EXPOSED TO VIEW, SHALL BECOME THE PROPERTY OF THE CONTRACTOR, AND SHALL BE REMOVED FROM THE PREMISES.

C. DISCONNECT SWITCHES:

1. FUSIBLE TYPE SHALL BE HEAVY DUTY, HORSEPOWER RATED, OF VOLTAGE RATING EQUAL TO VOLTAGE OF CIRCUIT TO WHICH CONNECTED, AND AMPERE RATING AS INDICATED. NONFUSIBLE TYPE SHALL BE SIMILAR, EXCEPT FOR MOTOR LOADS 2 HP OR SMALLER OR NONMOTOR LOADS CONNECTED TO A 20 A OR SMALLER CIRCUIT MAY BE MOTOR RATED TOGGLE TYPE SWITCHES OR NONAUTOMATIC CIRCUIT BREAKERS, UL LISTED FOR EACH SPECIFIC TYPE OF LOAD. ENCLOSURES SHALL BE NEMA TYPE 1 INDOORS, AND NEMA TYPE 3R WHERE EXPOSED TO WEATHER.
2. PROVIDE FUSES IN FUSIBLE EQUIPMENT AND DEVICES. PROVIDE TO THE OWNER, AS SPARES, 3 FUSES OF EACH SIZE AND TYPE FUSE Used

D. WIRING DEVICES:

1. DEVICES ON NORMAL POWER CIRCUITS SHALL BE GRAY IN COLOR. DEVICES ON EMERGENCY POWER CIRCUITS SHALL BE RED IN COLOR.
2. SINGLE-POLE WALL SWITCHES SHALL BE 277 V, 20 A, COOPER 2221, HUBBELL HBL1221, LEVITON 1221-2, OR P&S PS20AC1.
3. DUPLEX RECEPTACLES SHALL BE 125 V, WITH ONE-PIECE SOLID BRASS MOUNTING STRAP WITH INTEGRAL GROUND CONTACTS.
    a. MANUFACTURER, 15 A: COOPER AH5262, HUBBELL HBL5262, LEVITON 5262, OR P&S 5262A.
    b. MANUFACTURER, 20 A: COOPER AH5362, HUBBELL HBL5362, LEVITON 5362, OR P&S 5362A
4. TAMPER RESISTANT DUPLEX RECEPTACLES SHALL BE 125V, 20A, TWO POLE, THREE WIRE, SELF GROUNDING WITH INTEGRAL SHUTTERS THAT OPERATE ONLY WHEN A PLUG IS INSERTED IN THE RECEPTACLE.
5. DUPLEX GFCI RECEPTACLES SHALL BE 125V, 20A WITH INTEGRAL GFCI WITH "TEST" AND "RESET" BUTTONS AND LED INDICATOR LIGHT. TWO POLE, THREE WIRE, SELF GROUNDING, NON-FEED THROUGH TYPE. TAMPER RESISTANT DUPLEX RECEPTACLES SHALL HAVE INTEGRAL SHUTTERS THAT OPERATE ONLY WHEN A PLUG IS INSERTED IN THE RECEPTACLE.
6. DEVICES SHALL BE BY THE SAME MANUFACTURER.
7. THE APPROXIMATE LOCATIONS OF DEVICE OUTLETS ARE INDICATED. THE EXACT LOCATIONS SHALL BE DETERMINED AT THE BUILDING. THE ARCHITECT RESERVES THE RIGHT TO CHANGE THE EXACT LOCATION OF ANY SWITCH, CEILING OR OTHER OUTLET IN ANY ROOM BEFORE IT IS PERMANENTLY INSTALLED.
8. MOUNTING HEIGHTS OF OUTLETS SHALL BE AS INDICATED MEASURED TO THE CENTERLINE OF THE OUTLET.
9. WHERE OUTLETS AT DIFFERENT LEVELS ARE SHOWN ADJACENT, THEY SHALL BE INSTALLED IN ONE VERTICAL LINE.
10. DUPLEX RECEPTACLES SHALL GENERALLY BE 15 A RATED. WHERE A 20 A BRANCH CIRCUIT SERVES A SINGLE DUPLEX RECEPTACLE, THE RECEPTACLE SHALL BE 20 A RATED. DUPLEX RECEPTACLES IN CORRIDORS AND EQUIPMENT ROOMS SHALL BE 20 A RATED.
11. RECEPTACLES ON DEDICATED CIRCUITS FOR SPECIFIC ITEMS OF EQUIPMENT SHALL HAVE THE EQUIPMENT NAME ENGRAVED IN 0.125" HIGH LETTERS ON THE DEVICE PLATE.
12. SERVICE POLES SHALL BE 120V BRYANT BRYPP10A, LEGRAND 25DTP-4ACT, PGLIFELINK PP155-XC-XDXC-XN.

E. SWITCHBOX MOUNTED OCCUPANCY SENSORS:

1. DUAL TECHNOLOGY (PASSIVE INFRARED AND ULTRASONIC).
2. 120.
3. ADJUSTABLE TIME DELAY UP TO 30 MINUTES.
4. 180 DEGREE FIELD OF VIEW.
5. MINIMUM COVERAGE AREA 900 SQUARE FEET.

F. WALL BOX DIMMERS:

1. MODULAR, FULL-WAVE, SOLID-STATE UNITS WITH INTEGRAL ON-OFF SWITCHES WITH AUDIBLE FREQUENCY AND EMI/RFI SUPPRESSION FILTERS.
2. CONTINUOUSLY ADJUSTABLE SLIDER WITH SINGLE POLE SWITCHING. COMPLY WITH UL 1472.
3. LED LAMP DIMMER SWITCHES SHALL BE COMPATIBLE WITH LED LAMPS, INCLUDE A TRIM POTENTIOMETER TO ADJUST LOW-END DIMMING AND BE CAPABLE OF CONSISTENT DIMMING WITH LOW END NOT GREATER THAN 20% OF FULL BRIGHTNESS.

G. DEVICE COVERPLATES:

1. COVERPLATES FOR FLUSH WALL OUTLETS (SWITCH, RECEPTACLE, TELEPHONE, ETC.) SHALL BE TYPE 302 SATIN FINISH STAINLESS STEEL AS MANUFACTURED BY COOPER, HUBBELL, LEVITON, OR P&S.
2. WEATHERPROOF COVERS SHALL BE DIE-CAST ALUMINUM, DESIGNED FOR WET LOCATION PROTECTION WHETHER THE ATTACHMENT PLUG IS INSERTED OR REMOVED. COVERS SHALL BE NEMA 3R RATED WHEN USED WITH THE APPROPRIATE WEATHERPROOF OUTLET BOX.

H. RACEWAYS:

1. CONDUIT SIZES REFER TO THE STANDARD TRADE SIZES, ARE FOR IDENTIFICATION PURPOSES ONLY, AND ARE NOT ACTUAL DIMENSIONS.
2. WIRES SHALL BE INSTALLED IN RACEWAYS UNLESS OTHERWISE SPECIFIED.
3. RACEWAYS SHALL BE RIGID HOT-DIP GALVANIZED RIGID STEEL CONDUIT FOR EXPOSED WORK AND WHERE REQUIRED BY CODE.
4. CONCEALED RIGID RACEWAYS SHALL BE ELECTRICAL METALLIC TUBING, OF ELECTRO OR HOT-DIP GALVANIZED STEEL.
5. RACEWAYS SHALL BE GALVANIZED FLEXIBLE STEEL CONDUIT FOR CONNECTIONS TO MOTORS (MAXIMUM LENGTH 18"),
6. FLEXIBLE CONDUIT EXPOSED TO WEATHER OR SPRAY SHALL BE NEOPRENE JACKETED STEEL, AND INSTALLED WITH WATERTIGHT FITTINGS.
7. COORDINATE EXACT REQUIREMENTS FOR CONNECTION OF MODULAR OFFICE FURNITURE PANELS WITH THE PARTICULAR SUPPLIER, AND MAKE FINAL CONNECTIONS.
8. PROVIDE A COMPLETE RACEWAY SYSTEM WITH PULL LINES IN CONDUIT FOR DATA AND/OR COMMUNICATION OUTLETS.
9. JUNCTION BOXES INSTALLED FOR FUTURE USE SHALL BE PROVIDED WITH BLANK COVERPLATES.
10. CONNECTORS AND COUPLINGS FOR RIGID CONDUIT SHALL BE THREADED GALVANIZED STEEL. INSULATED BUSHINGS SHALL BE INSTALLED ON RIGID CONDUIT CONNECTORS IN CABINETS, OUTLET BOXES AND PULL BOXES.
11. FITTINGS FOR ELECTRICAL METALLIC TUBING SHALL BE STEEL TYPE WITH INSULATED THROAT CONNECTORS AND SHALL BE CODE APPROVED FOR EACH SPECIFIC APPLICATION.
12. CONNECTORS FOR FLEXIBLE STEEL CONDUIT (NONWATERTIGHT) SHALL BE OF THE TWIST-IN, INSERTION TYPE, WITH INSULATED THROAT.
13. CONCEALED RACEWAYS NOT IN SLABS OR WALLS SHALL BE SUPPORTED WITH CLAMPS ON HANGERS AT 8' OR LESS INTERVALS.
14. IN GENERAL, THE CONDUIT INSTALLATION SHALL FOLLOW THE LAYOUT INDICATED. THIS LAYOUT IS, HOWEVER, DIAGRAMMATIC ONLY, AND WHERE CHANGES ARE NECESSARY DUE TO STRUCTURAL CONDITIONS, OTHER APPARATUS, OR OTHER CAUSES, SUCH CHANGES SHALL BE MADE WITHOUT ANY ADDITIONAL COST TO THE OWNER. OFFSETS IN CONDUITS ARE NOT INDICATED AND MUST BE FURNISHED AS REQUIRED.
15. PULL LINES SHALL BE INSTALLED IN EMPTY RACEWAYS. AT EACH END, LEAVE 12" OF SLACK COILED IN BOX OR AT END OF RACEWAYS.

I. WIRING:

1. NO WIRE SHALL BE SMALLER THAN #12 AWG UNLESS OTHERWISE INDICATED.
2. WIRE AND CABLE SHALL BE ANNEALED SOFT DRAWN COPPER AND HAVE A CONDUCTANCE OF 98%.
3. SPLICES, TAPS AND TERMINATIONS:
    a. SPLICES AND TAPS IN BRANCH CIRCUIT CONDUCTORS, #12 AWG THROUGH #8 AWG, SHALL BE MADE WITH MECHANICAL PRESSURE CONNECTORS.
    b. TERMINATIONS OF STRANDED COPPER CONDUCTORS SHALL BE MADE WITH COPPER COMPRESSION OR INDENTOR TYPE LUGS OR WITH MECHANICAL PRESSURE LUGS.
    c. JOINTS SHALL BE COVERED WITH 7 MIL ELECTRICAL TAPE ON BRANCH CIRCUIT WIRING CONNECTIONS, AND 10 MIL ELECTRICAL TAPE ON MECHANICAL AND INDENT CONNECTORS ON LARGER CABLES. PATENTED PLASTIC CONNECTION COVERS MAY BE USED FOR CONNECTORS IF APPROVED BY LOCAL AUTHORITY HAVING JURISDICTION.
4. WIRE SHALL BE COLOR-CODED TO INDICATE THE VARIOUS PHASES AND NEUTRAL. WHERE COLOR-CODING IS IMPRACTICAL, 0.75" WIDE TAPE BANDS SHALL BE PROVIDED.
5. COLOR-CODING FOR THE VARIOUS SYSTEMS SHALL BE AS FOLLOWS:

FOR 208/120 V SYSTEM:	FOR 480/277 V SYSTEM:
PHASE A - BLACK	PHASE A - BROWN
PHASE B - RED	PHASE B - ORANGE
PHASE C - BLUE	PHASE C - YELLOW
NEUTRAL - WHITE	NEUTRAL - WHITE
GROUND - GREEN	GROUND - GREEN

6. ISOLATED GROUND CONDUCTORS SHALL BE SO INDICATED BY GREEN WITH WHITE STRIPE COLOR-CODING.
7. INSULATION SHALL BE NEC TYPE THWN/THHN.
8. FIRE ALARM WIRING:
    a. FIRE ALARM WIRING SPECIFICATION SHALL BE PER FIRE ALARM SHOP DRAWINGS.
    b. WIRING SHALL BE CLASS B UNLESS OTHERWISE NOTED.
    c. WIRING SHALL BE TYPE FPL/FPLR WIRING. WIRING IN NON-ACCESSIBLE AREAS SHALL BE RAN IN METAL CONDUIT MARKED WITH RED TAPE.

J. METAL-CLAD CABLE:

1. METAL-CLAD CABLE INCLUDING GREEN INSULATED GROUND WIRE MAY BE USED WHERE PERMITTED BY CODE FOR LUMINAIRE AND RECEPTACLE BRANCH CIRCUIT WORK IN STUD PARTITIONS AND IN CEILING CONSTRUCTION.
2. ADAPTORS SHALL BE USED AT CONNECTIONS TO BOXES AND TO OTHER RACEWAYS.
3. WHERE METAL-CLAD CABLE FEEDS OUTLETS LOCATED IN MASONRY WALLS, A PIECE OF CONDUIT SHALL BE INSTALLED FOR THAT PORTION OF THE RUN IN OR ON THE MASONRY, THE METALLIC SHEATH SHALL BE STRIPPED FROM THE CABLE AND THE CABLE THREADED INTO THE CONDUIT AND A CABLE TO CONDUIT COUPLING SHALL BE INSTALLED IN ORDER TO BOND THE METALLIC SHEATH TO THE CONDUIT.
4. SUPPORT METAL-CLAD CABLE ABOVE SUSPENDED CEILINGS IN ACCORDANCE WITH NATIONAL AND LOCAL CODES.

K. EQUIPMENT GROUNDS:

1. EQUIPMENT, ENCLOSURES AND RACEWAYS SHALL BE GROUNDED.
2. A GREEN COLORED OR GREEN IDENTIFIED GROUNDING CONDUCTOR SHALL BE INSTALLED IN RACEWAYS WITH THE PHASE CONDUCTORS.
3. BOND GROUND CONDUCTORS AT ORIGIN OF CIRCUITS, AT INTERMEDIATE PULL BOXES, AND TO PANELBOARDS OR EQUIPMENT AT TERMINATIONS.

L. PANELBOARDS:

1. BUSWORK SHALL BE COPPER.
2. PROVIDE GROUND BUS BARS IN CABINETS.
3. PROTECTIVE DEVICES IN PANELBOARDS SHALL BE MOLDED CASE THERMAL-MAGNETIC, AUTOMATIC CIRCUIT BREAKERS OF FRAME TYPES, NUMBER POLES, TRIP RATINGS AND QUANTITIES AS INDICATED.
4. MAIN AND BRANCH BREAKERS SHALL BE RATED FOR THE FAULT CURRENT LEVEL INDICATED, MINIMUM 10000 A RMS SYMMETRICAL FOR 208 V OR 120 V AC, AND 14000 A RMS SYMMETRICAL FOR 480 V OR 277 V AC.
5. SPACES FOR FUTURE BREAKERS SHALL BE EQUIPPED WITH HARDWARE TO ACCEPT BREAKERS, AND SHALL BE BUSSED TO ACCEPT A MINIMUM 60 A BREAKER WITHOUT REVISIONS, UNLESS OTHERWISE INDICATED.
6. PANELBOARDS SHALL BE BY THE SAME MANUFACTURER AS EXISTING.
7. UNLESS OTHERWISE INDICATED, INSTALL TOP OF PANELBOARD CABINETS 6'-6" ABOVE THE FINISHED FLOOR.

M. ENCLOSED CIRCUIT BREAKERS:

1. MOLDED CASE BREAKERS SHALL COMPLY WITH UL 489 AND NEMA AB 3 WITH AN INTERRUPTING RATING TO MEET AVAILABLE FAULT CURRENTS. BREAKERS SHALL BE MOLDED CASE WITH ADJUSTABLE TRIP SETTING FOR BREAKERS 250 A AND LARGER.
2. ENCLOSURES SHALL BE NEMA 1 FOR INTERIOR APPLICATIONS AND NEMA 3R FOR EXTERIOR OR WET OR DAMP INTERIOR LOCATIONS.

N. LUMINAIRES:

1. REFER TO ARCHITECTURAL REFLECTED CEILING PLANS FOR EXACT LOCATIONS OF LUMINAIRES.
2. LUMINAIRES UTILIZED DURING CONSTRUCTION SHALL BE RELAMPED PRIOR TO ACCEPTANCE BY THE OWNER.
3. EXISTING LUMINAIRES TO BE REUSED SHALL BE CLEANED AND RELAMPED. LAMPS AND BALLASTS SHALL MATCH THOSE USED IN THE NEW CONSTRUCTION.
4. PROVIDE SEPARATE NEUTRALS FOR DIMMED CIRCUITS.
5. SEE ARCHITECTURAL SECTIONS AND ELEVATIONS FOR EXACT LOCATIONS OF WALL-MOUNTED LUMINAIRES.
6. CEILING-MOUNTED LUMINAIRES SHALL BE INDEPENDENTLY SUPPORTED FROM THE STRUCTURE.

P. MISCELLANEOUS:

1. MAINTAIN, ON SITE, A COMPREHENSIVE SET OF DRAWINGS WITH AS-BUILT CONDITIONS CLEARLY INDICATED IN RED.
2. VERIFY CODE COMPLIANCE OF EXISTING CONDITIONS. IF ANY OF THE EXISTING ELECTRICAL INSTALLATION TO BE UTILIZED IN TENANT CONSTRUCTION IS FOUND TO BE DEFECTIVE OR IN VIOLATION OF NATIONAL, STATE OR LOCAL CODES, NOTIFY THE ARCHITECT IN WRITING WITHIN 5 WORKING DAYS.
3. VERIFY THE LOAD ON EXISTING CIRCUITS TO BE MODIFIED AND/OR REUSED TO ENSURE THAT THE RATINGS OF THE OVERCURRENT PROTECTION DEVICES ARE NOT EXCEEDED. A TRUE-RMS AMMETER WHICH GIVES WIDE BANDWIDTH READINGS OF CURRENT WITH HARMONICS SHALL BE USED. NOTIFY THE ARCHITECT OF ANY OVERLOAD CONDITIONS IN WRITING WITHIN 5 WORKING DAYS.
4. LUMINAIRES, LAMPS, BALLASTS, DEVICES AND EQUIPMENT PURCHASES FOR TENANT CONSTRUCTION AND NOT INSTALLED SHALL BE TURNED OVER TO THE OWNER.
5. WORK SHALL BE NEAT IN APPEARANCE, PLUMB, LEVEL AND TRUE. ANY WORK DEEMED UNSATISFACTORY BY THE ARCHITECT SHALL IMMEDIATELY BE REMOVED AND REPLACED.

WSP USA Buildings Inc.
3340 Peachtree Road, NE,
Suite 1100
Atlanta, GA 30326
(404) 815-4152
wsp.com

HLGstudio
1401 Peachtree St.
Suite 200
Atlanta, Georgia 30309
404.760.7788
404.760.7787 - Fx.
www.HLGstudio.com

SHEAR STRUCTURAL
931 Monroe Dr.
Suite A102-491
Atlanta, GA 30308
(678) 664-8051
Shearstructural.com

Grady Legal Hall HVAC Modifications and Health Equity Suite Renovation
36 Jesse Hill Jr. Dr. SE
Atlanta, Georgia

PROJECT NORTH

Issue	Date & Description	By
	03/18/2025 ISSUED FOR CONSTRUCTION	

Drawn by **DP** Reviewed by **LR**

Seal/Signature

GEORGIA REGISTERED PROFESSIONAL ENGINEER LEE K. ROBERSON 3/18/2025

Project
GRADY LEGAL HALL HVAC MODIFICATIONS AND HEALTH EQUITY SUITE RENOVATION

Project Number

Sheet Title
ELECTRICAL SPECIFICATIONS

Scale
N/A

Sheet Number
E.001

3/27/2025 4:12:46 PM Autodesk Docs://Grady Legal Hall/WSP-Grady Legal Hall-ELEC.rvt

DATA SYMBOLS LEGEND

ALL SYMBOLS SHOWN MAY NOT APPEAR IN ALL DRAWINGS. SYMBOLS ARE SHOWN SCHEMATIC AND MAY NOT BE TO SCALE.

SYMBOL	DESCRIPTION	MNTG. HT. UNO
	VOICE AND DATA OUTLET.	18" WALL AFF
	VOICE AND DATA OUTLET, ABOVE COUNTER.	8" WALL AFC OR 42" WALL AFF
TV	DATA OUTLET AND COAX CABLE.	72" WALL AFF
	FLOOR MOUNTED VOICE AND DATA OUTLET.	FLOOR
	CEILING MOUNTED VOICE AND DATA OUTLET.	ABOVE ACCESSIBLE CEILING
	COMBINATION RECEPTACLE/COMMUNICATIONS OUTLET FLOOR BOX WITH 2 DUPLEX RECEPTACLES AND 3 SINGLE GANG OPENINGS FOR IT/AV. PROVIDE (1) VOICE/DATA OUTLET IN ONE OF SINGLE GANG SPACES. SEE NOTE 4.	FLOOR
	DATA NOTES	

1. REFER TO ARCHITECTURAL ELEVATIONS FOR EXACT MOUNTING HEIGHTS OF ALL DEVICES.
2. ALL BOXES TO BE 4" SQUARE BOXES WITH SINGLE GANG ADAPTER FOR SPECIFIED OUTLET. CONFIRM ALL BACKBOX SIZE WITH FACILITY I.S. GROUP OR I.S. CONTRACTOR PRIOR TO ELECTRICAL ROUGH-IN.
3. PROVIDE (1) 1" CONDUIT FROM ALL DEVICE BACKBOXES TO ABOVE ACCESSIBLE CEILING.
4. PROVIDE (1) 1" CONDUIT FROM EACH IT/AV GANG OPENING WITHIN EACH FLOOR BOX TO ABOVE ACCESSIBLE CEILING.
5. PROVIDE (2) 1" CONDUITS FROM ALL TV OUTLETS TO ABOVE ACCESSIBLE CEILING.
6. ALL EMPTY CONDUITS AND SLEEVES SHALL HAVE NYLON BUSHINGS AT BOTH ENDS AND NYLON PULLCORD.

ELECTRONIC SAFETY & SECURITY DEVICE LEGEND

SYMBOL	DESCRIPTION
	PROVIDE DATA OUTLET TO SUPPORT CCTV CAMERA PROVIDED BY OWNER. COORDINATE THE CAMERA REQUIREMENTS WITH OWNER.
CR	DOUBLE GANG BOX WITH SINGLE GANG PLASTER RING TO SUPPORT OWNER PROVIDED AND INSTALLED CARD READER - REFER TO DETAIL THIS SHEET FOR ADDITIONAL WORK.
IC	DOUBLE GANG BOX WITH SINGLE GANG PLASTER RING TO SUPPORT OWNER PROVIDED AND INSTALLED INTERCOM
KP	DOUBLE GANG BOX WITH SINGLE GANG PLASTER RING TO SUPPORT OWNER PROVIDED AND INSTALLED KEYPAD
ML	ELECTRIFIED HARDWARE PROVIDED UNDER DIV 8, PROVIDE ELECTRICAL CONNECTION PER MANUFACTURER'S REQUIREMENTS.
DR	DOUBLE GANG BOX WITH SINGLE GANG PLASTER RING TO SUPPORT OWNER PROVIDED AND INSTALLED DOOR RELEASE PUSHBUTTON
EL	DOUBLE GANG BOX WITH SINGLE GANG PLASTER RING TO SUPPORT OWNER PROVIDED AND INSTALLED EMERGENCY LOCK PUSHBUTTON.
VC	DOUBLE GANG BOX WITH SINGLE GANG PLASTER RING TO SUPPORT OWNER PROVIDED AND INSTALLED VIDEO CALL STATION.

SECURITY NOTES:

1. COORDINATE SECURITY DEVICE LOCATIONS WITH SECURITY CONTRACTOR. LOCATIONS SHOWN ON THE DRAWINGS ARE DIAGRAMMATICAL.
2. CONTRACTOR SHALL COORDINATE FINAL LOCATIONS WITH THE ARCHITECT AND SECURITY DEVICE VENDOR.
3. COORDINATE RACEWAY REQUIREMENTS AND ROUTING WITH OWNER PRIOR TO ROUGH-IN.
4. ALL EMPTY CONDUITS AND SLEEVES SHALL HAVE NYLON BUSHINGS AT BOTH ENDS AND NYLON PULLCORD.

FIRE ALARM SYSTEM DESIGN

FIRE ALARM SYSTEMS IS A DELEGATED DESIGN. THESE DRAWINGS ARE INTENDED TO SHOW GENERAL GUIDELINES FOR THE PLACEMENT OF FIRE ALARM DEVICES AS THEY RELATE TO OTHER (NON-FIRE ALARM) SYSTEMS AND FOR PERMITTING PURPOSES. THE FINAL FIRE ALARM PLANS TO BE SUBMITTED FOR AHJ APPROVAL SHALL BE PRODUCED AND SEALED BY A NICET LEVEL III CERTIFIED DESIGNER; REFER TO THE ELECTRICAL SPECIFICATIONS FOR FURTHER REQUIREMENTS. THE DESIGNER SHALL PROVIDE ALL DEVICES SHOWN ON THESE DRAWINGS AND ANY ADDITIONAL DEVICES OR COMPONENTS REQUIRED FOR A COMPLETE SYSTEM. IF OTHER DEVICES ARE ANTICIPATED TO BE REQUIRED FOR SYSTEM FUNCTIONALITY, COMPLIANCE WITH NATIONAL AND LOCAL CODES OR APPROVAL OF THE AHJ, THE CONTRACTOR SHALL QUALIFY THEIR BID AND SHALL PROVIDE AN ADD ALTERNATE PRICE MAKING NOTE OF THE SPECIFIC ANTICIPATED ADDITIONAL REQUIREMENTS.

BUILDING CODE:	2018 IBC WITH GEORGIA AMENDMENTS
FIRE CODE:	2018 IFC
ELECTRICAL CODE:	2023 NFPA 70 (NEC)
BUILDING CONSTRUCTION TYPE:	TYPE 1A - FULLY SPRINKLERED

	SYSTEM INPUTS	CONTROL UNIT ANNUNCIATION						NOTIFICATION					REQUIRED FIRE SAFETY CONTROL								SUPPLEMENTARY	
		A	B	C	D	E	F	G	H	I	J	K	L	M	N	O	P	Q	R		S	T
		ACTUATE COMMON ALARM SIGNAL INDICATOR	ACTUATE AUDIBLE-ALARM SIGNAL	ACTUATE COMMON SUPERVISORY SIGNAL INDICATOR	ACTUATE AUDIBLE-SUPERVISORY SIGNAL	ACTUATE COMMON TROUBLE SIGNAL INDICATOR	ACTUATE AUDIBLE-TROUBLE SIGNAL	ACTUATE AUDIBLE COMMON ROUBLE SIGNAL	ACTUATE FIRE ALARM SPEAKERS AND STROBES	DISPLAY/PRINT CHANGE OF STATUS	TRANSMIT FIRE ALARM SIGNAL	TRANSMIT SUPERVISORY SIGNAL TO SUPERVISING STATION	TRANSMIT TROUBLE SIGNAL TO SUPERVISING STATION	RELEASE MAGNETICALLY HELD SMOKE DOORS	RECALL ELEVATORS TO PRIMARY RECALL FLOOR	RECALL ELEVATORS TO ALTERNATE RECALL FLOOR	INITIATE SHUNT TRIP OF ELEVATOR	SHUT DOWN ASSOCIATED HVAC UNIT	OVERRIDE DELAYED EGRESS SECURITY TURNSTILE	SIGNAL TO SECURITY SYSTEM	FIRE ALARM ANNUNCIATOR DISPLAY	
1	MANUAL FIRE ALARM PULL STATION	●	●					●	●	●			●					●	●		●	●
2	SMOKE DETECTOR	●	●					●	●	●			●					●	●		●	●
3	SMOKE DETECTOR (ELEV LOBBY/MACHINE RM)	●	●						●	●			●	●							●	●
4	HEAT DETECTOR (ELEVATOR MACHINE ROOM)	●	●					●	●	●			●			●	●				●	●
5	HEAT DETECTOR	●	●					●	●	●			●	●				●	●		●	●
6	IN-DUCT SMOKE DETECTORS			●	●				●		●						●					●
7	SPRINKLER WATER FLOW	●	●					●	●	●			●	●				●	●		●	●
8	VALVE TAMPER SWITCH (INCLUDING PIV)			●	●				●		●											●
9	FIRE ALARM AC POWER FAILURE					●	●					●										●
10	FIRE ALARM SYSTEM LOW BATTERY					●	●					●										●
11	OPEN CIRCUIT					●	●					●										●
12	GROUND FAULT					●	●					●										●
13	NOTIFICATION APPLIANCE SHORT CIRCUIT					●	●					●										●
14	FACP LOSS OF AC POWER					●	●					●										●

2 **FIRE ALARM FUNCTIONAL MATRIX**
12" = 1'-0"

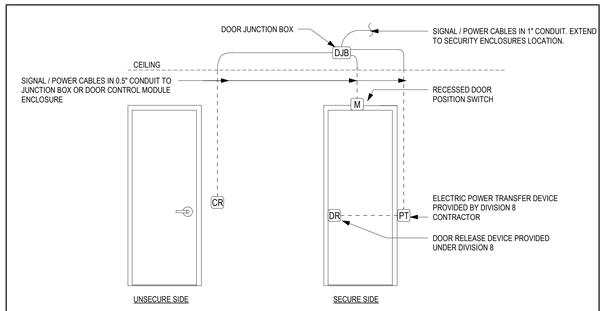

SEQUENCE OF OPERATION:

UNSECURE SIDE:

1. PRESENT VALID CREDENTIAL SHALL:
   A. UNLOCK DOOR
   B. SHUNT ALARM
2. UPON CLOSING THE DOOR SHALL:
   A. LOCK
   B. REARM

SECURE SIDE:

1. DEPRESSING CRASHBAR OR TURNING DOOR HANDLE SHALL TRIGGER A REQUEST-TO-EXIT AND SHALL:
   A. DIARM THE DELAY EGRESS SYSTEM
   B. SHUNT ALARM
   B. UNLOCK THE DOOR WHERE THE MECHANICAL ACTION OF THE DOOR REQUIRES IT.

1 **CARD READER DETAIL - SINGLE DOOR**
3/32" = 1'-0"

WSP USA Buildings Inc.
3340 Peachtree Road, NE,
Suite 1100
Atlanta, GA 30326
(404) 815-4152
wsp.com

HLGstudio
1401 Peachtree St.
Suite 200
Atlanta, Georgia 30309
404.760.7788
404.760.7787 - Fx.
www.HLGstudio.com

SHEAR STRUCTURAL
931 Monroe Dr.
Suite A102-491
Atlanta, GA 30308
(678) 664-8051
Shearstructural.com

Grady Legal Hall HVAC Modifications and Health Equity Suite Renovation
36 Jesse Hill Jr. Dr. SE
Atlanta, Georgia

PROJECT NORTH

Issue	Date & Description	By
	03/18/2025 ISSUED FOR CONSTRUCTION	

Drawn by **DP** Reviewed by **LR**

Seal/Signature

GEORGIA REGISTERED NO. PE024980 PROFESSIONAL ENGINEER 3/18/2025 LEE K. ROBERSON

Project
GRADY LEGAL HALL HVAC MODIFICATIONS AND HEALTH EQUITY SUITE RENOVATION

Project Number

Sheet Title
ELECTRICAL DATA AND FIRE ALARM LEGEND AND DETAILS

Scale
N/A

Sheet Number
E.002

3/27/2025 4:12:47 PM Autodesk Docs://Grady Legal Hall/WSP-Grady Legal Hall-ELEC.rvt

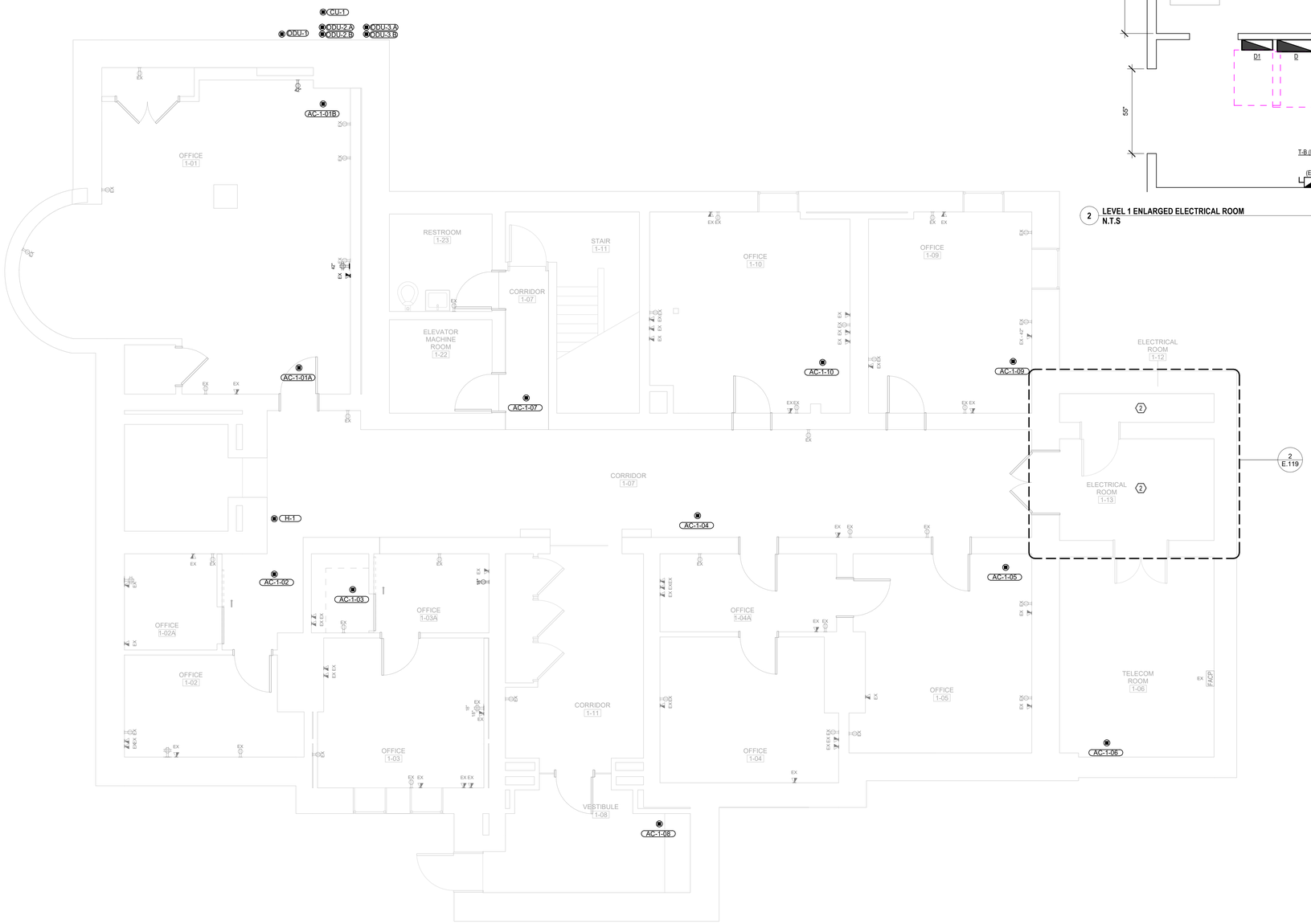

1 **LEVEL 1 POWER PLAN**
1/4" = 1'-0"

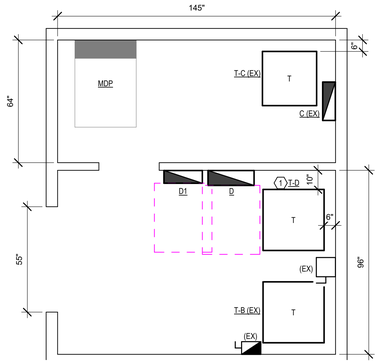

2 **LEVEL 1 ENLARGED ELECTRICAL ROOM**
N.T.S

GRAPHIC SCALE: 1/4" = 1'

0' 2' 4' 8'

KEY NOTES

1 NEW TRANSFORMER SHALL BE MOUNTED ABOVE EXISTING TRANSFORMER. SEE SINGLE LINE FOR MORE INFORMATION ON SHEET E.800.

2 ELECTRICAL ROOM IS NOT DRAWN TO SCALE. REFER TO ENLARGED ELECTRICAL PLAN ON SHEET E.119 FOR MORE INFORMATION.

GENERAL NOTES

A. BRANCH CIRCUIT WIRING SHALL BE A MINIMUM OF 3#12 CONDUCTORS INCLUDING GROUND CONDUCTORS UNLESS OTHERWISE INDICATED OR AS INDICATED BELOW:
   A. FOR 120V, 20A CIRCUITS 75' OR GREATER PROVIDE #10 AWG HOMERUN CONDUCTORS.
   B. FOR 120V, 20A CIRCUITS 150' OR GREATER PROVIDE #8 AWG HOMERUN CONDUCTORS.
   C. FOR 277V, 20A CIRCUITS 150' OR GREATER PROVIDE #10 AWG HOMERUN CONDUCTORS.
B. VERIFY EXACT LOCATION OF POWER, DATA, AND VOICE (TELEPHONE) OUTLETS WITH ARCHITECTURAL DRAWINGS. COORDINATE DISCREPANCIES WITH THE ARCHITECT AND ENGINEER. COORDINATE FINISH COLORS OF ALL DEVICES WITH THE ARCHITECT.
C. REFER TO ARCHITECTURAL ELEVATIONS TO DETERMINE ORIENTATION OF ABOVE COUNTER RECEPTACLES, I.E. HORIZONTAL OR VERTICAL.
D. REFER TO ARCHITECTURAL, STRUCTURAL AND MECHANICAL DRAWINGS FOR GUIDANCE AND VERIFICATION OF DIMENSIONS, CEILING HEIGHTS, DOOR SWINGS, ROOM FINISHES AND LOCATION OF DUCTWORK, PIPES, STRUCTURAL STEEL, EQUIPMENT, CABINET WORK AND FURNITURE.
E. PENETRATIONS OF STRUCTURAL ELEMENTS, WALLS, FLOORS AND ROOFS FOR THE PASSAGE OF RACEWAYS SHALL BE APPROVED BY THE STRUCTURAL ENGINEER. PENETRATIONS SHALL BE PROPERLY SEALED AFTER INSTALLATION SO AS TO MAINTAIN THE INTEGRITY OF THE SYSTEM PENETRATED.
F. INSTALL WALL LIGHTING FIXTURES, WALL SWITCHES, WALL OUTLETS AND OTHER WALL MOUNTED EQUIPMENT IN STRICT COORDINATION WITH DETAILS, SECTIONS, ELEVATIONS AND ROOM FINISHES SHOWN ON ARCHITECTURAL DRAWINGS.
G. WALL AND FLOOR MOUNTED POWER RECEPTACLES SHOWN NEAR DATA OUTLETS SHALL BE LOCATED WITHIN SIX (6) INCHES OF THE DATA OUTLET. LOCATE AT SAME MOUNTING HEIGHT UNLESS NOTED OTHERWISE.
H. CIRCUIT DESIGNATION IS BASED UPON FIELD INVESTIGATION OF CIRCUIT BREAKERS, CIRCUIT DIRECTORIES, AND EXISTING DRAWINGS. CONTRACTOR SHALL VERIFY THAT ASSIGNED CIRCUITS ARE AVAILABLE AND MAINTAIN THE INTEGRITY OF CIRCUITS OUTSIDE OF THE AREA OF DEMOLITION.
I. MEMBRANE PENETRATIONS OF MAXIMUM 2-HOUR FIRE-RESISTANCE-RATED WALLS AND PARTITIONS BY STEEL ELECTRICAL BOXES SHALL BE IN ACCORDANCE WITH IBC ARTICLE 714.4.2. WHERE THE SPACING REQUIREMENTS OF THIS ARTICLE CANNOT BE MET, STEEL BOXES SHALL BE PROTECTED WITH UL LISTED PUTTY PADS OR BY OTHER LISTED MATERIALS AND METHODS.
J. DESIGNATION 'EX' REPRESENTS EXISTING DEVICE OR LIGHT FIXTURE TO REMAIN AS CIRCUITED AND SWITCHED UNLESS NOTED OTHERWISE. EXISTING LIGHT FIXTURES SHALL BE CLEANED AND REPAIRED AS REQUIRED.
K. EXISTING RACEWAYS AND ELECTRICAL BOXES IN GOOD CONDITION MAY BE REUSED FOR NEW DEVICES IF IN APPROXIMATE LOCATION AS DEVICES SHOWN.
L. EXISTING CONDITIONS TO REMAIN. ALL NEW WORK INSTALLED TO MEET CURRENT CODE REQUIREMENTS. PRELIMINARY ANNOTATIVE SET WAS REVIEWED WITH CITY OF ATLANTA ON 03/08/2022 BEFORE SUBMITTING FOR PERMIT.
M. CONVERGIN, MITEC, AND LOW VOLTAGE WIRING ADDED BY OWNER.

WSP USA Buildings Inc.
3340 Peachtree Road, NE,
Suite 1100
Atlanta, GA 30326
(404) 815-4152
wsp.com

HLGstudio
1401 Peachtree St.
Suite 200
Atlanta, Georgia 30309
404.760.7788
404.760.7787 - Fx.
www.HLGstudio.com

SHEAR STRUCTURAL
931 Monroe Dr.
Suite A102-491
Atlanta, GA 30308
(678) 664-8051
Shearstructural.com

Grady Legal Hall HVAC Modifications and Health Equity Suite Renovation
36 Jesse Hill Jr. Dr. SE
Atlanta, Georgia

PROJECT NORTH

Issue	Date & Description	By
	03/18/2025 ISSUED FOR CONSTRUCTION	

Drawn by **DP** Reviewed by **LR**

Seal/Signature

GEORGIA REGISTERED PROFESSIONAL ENGINEER LEE K. ROBERSON 3/18/2025

Project
GRADY LEGAL HALL HVAC MODIFICATIONS AND HEALTH EQUITY SUITE RENOVATION

Project Number

Sheet Title
LEVEL 1 ELECTRICAL POWER PLAN

Scale
As indicated

Sheet Number
E.119

3/27/2025 4:12:47 PM Autodesk Docs://Grady Legal Hall/WSP-Grady Legal Hall-ELEC.rvt

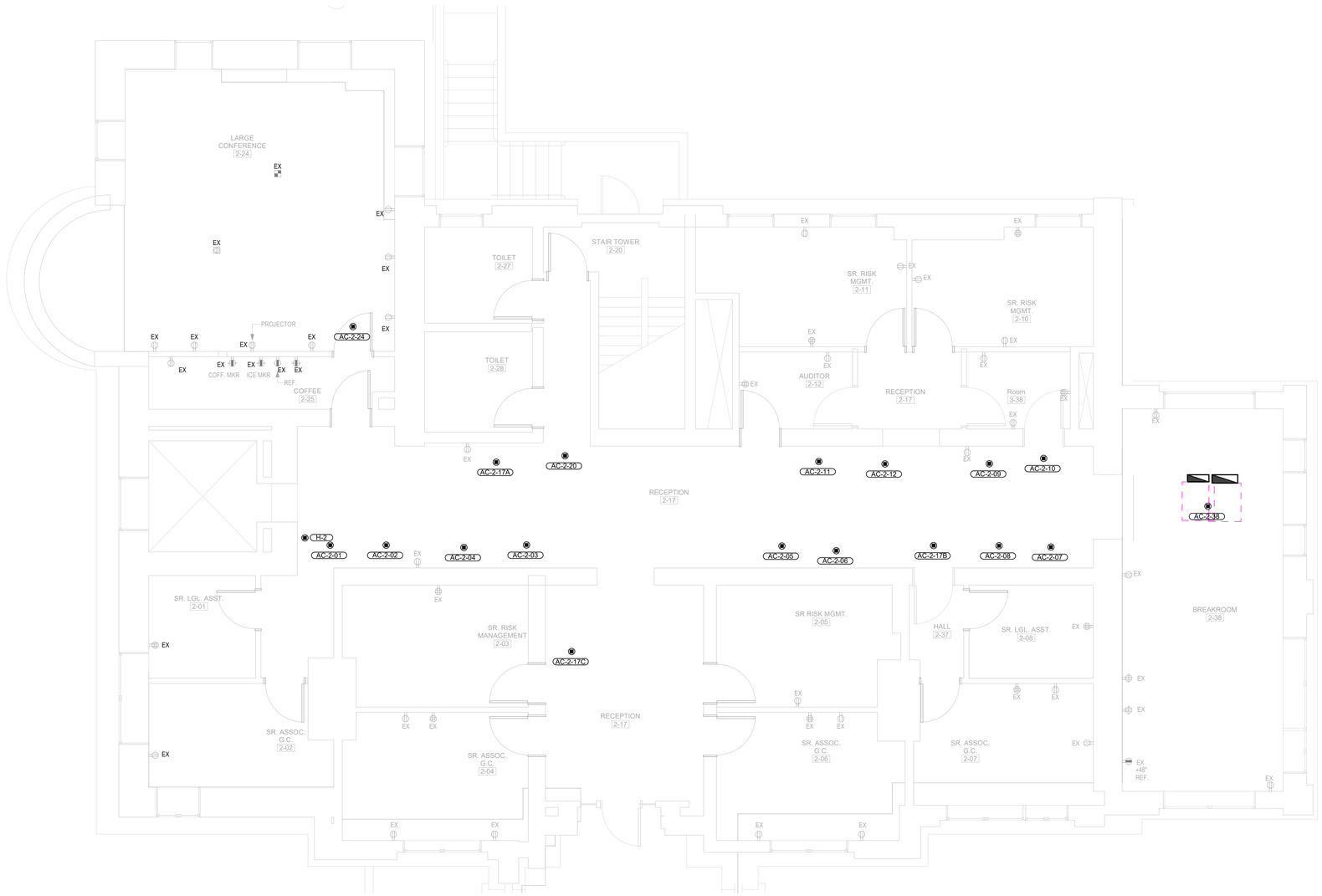

1 **LEVEL 2 POWER PLAN**
1/4" = 1'-0"

GRAPHIC SCALE: 1/4" = 1'
0' 2' 4' 8'

KEY NOTES

GENERAL NOTES

A. BRANCH CIRCUIT WIRING SHALL BE A MINIMUM OF 3#12 CONDUCTORS INCLUDING GROUND CONDUCTORS UNLESS OTHERWISE INDICATED OR AS INDICATED BELOW:
   A. FOR 120V, 20A CIRCUITS 75' OR GREATER PROVIDE #10 AWG HOMERUN CONDUCTORS.
   B. FOR 120V, 20A CIRCUITS 150' OR GREATER PROVIDE #8 AWG HOMERUN CONDUCTORS.
   C. FOR 277V, 20A CIRCUITS 150' OR GREATER PROVIDE #10 AWG HOMERUN CONDUCTORS.
B. VERIFY EXACT LOCATION OF POWER, DATA, AND VOICE (TELEPHONE) OUTLETS WITH ARCHITECTURAL DRAWINGS. COORDINATE DISCREPANCIES WITH THE ARCHITECT AND ENGINEER. COORDINATE FINISH COLORS OF ALL DEVICES WITH THE ARCHITECT.
C. REFER TO ARCHITECTURAL ELEVATIONS TO DETERMINE ORIENTATION OF ABOVE COUNTER RECEPTACLES, I.E. HORIZONTAL OR VERTICAL.
D. REFER TO ARCHITECTURAL, STRUCTURAL AND MECHANICAL DRAWINGS FOR GUIDANCE AND VERIFICATION OF DIMENSIONS, CEILING HEIGHTS, DOOR SWINGS, ROOM FINISHES AND LOCATION OF DUCTWORK, PIPES, STRUCTURAL STEEL, EQUIPMENT, CABINET WORK AND FURNITURE.
E. PENETRATIONS OF STRUCTURAL ELEMENTS, WALLS, FLOORS AND ROOFS FOR THE PASSAGE OF RACEWAYS SHALL BE APPROVED BY THE STRUCTURAL ENGINEER. PENETRATIONS SHALL BE PROPERLY SEALED AFTER INSTALLATION SO AS TO MAINTAIN THE INTEGRITY OF THE SYSTEM PENETRATED.
F. INSTALL WALL LIGHTING FIXTURES, WALL SWITCHES, WALL OUTLETS AND OTHER WALL MOUNTED EQUIPMENT IN STRICT COORDINATION WITH DETAILS, SECTIONS, ELEVATIONS AND ROOM FINISHES SHOWN ON ARCHITECTURAL DRAWINGS.
G. WALL AND FLOOR MOUNTED POWER RECEPTACLES SHOWN NEAR DATA OUTLETS SHALL BE LOCATED WITHIN SIX (6) INCHES OF THE DATA OUTLET. LOCATE AT SAME MOUNTING HEIGHT UNLESS NOTED OTHERWISE.
H. CIRCUIT DESIGNATION IS BASED UPON FIELD INVESTIGATION OF CIRCUIT BREAKERS, CIRCUIT DIRECTORIES, AND EXISTING DRAWINGS. CONTRACTOR SHALL VERIFY THAT ASSIGNED CIRCUITS ARE AVAILABLE AND MAINTAIN THE INTEGRITY OF CIRCUITS OUTSIDE OF THE AREA OF DEMOLITION.
I. MEMBRANE PENETRATIONS OF MAXIMUM 2-HOUR FIRE-RESISTANCE-RATED WALLS AND PARTITIONS BY STEEL ELECTRICAL BOXES SHALL BE IN ACCORDANCE WITH IBC ARTICLE 714.4.2. WHERE THE SPACING REQUIREMENTS OF THIS ARTICLE CANNOT BE MET, STEEL BOXES SHALL BE PROTECTED WITH UL LISTED PUTTY PADS OR BY OTHER LISTED MATERIALS AND METHODS.
J. DESIGNATION 'EX' REPRESENTS EXISTING DEVICE OR LIGHT FIXTURE TO REMAIN AS CIRCUITED AND SWITCHED UNLESS NOTED OTHERWISE. EXISTING LIGHT FIXTURES SHALL BE CLEANED AND REPAIRED AS REQUIRED.
K. EXISTING RACEWAYS AND ELECTRICAL BOXES IN GOOD CONDITION MAY BE REUSED FOR NEW DEVICES IF IN APPROXIMATE LOCATION AS DEVICES SHOWN.
L. EXISTING CONDITIONS TO REMAIN. ALL NEW WORK INSTALLED TO MEET CURRENT CODE REQUIREMENTS. PRELIMINARY ANNOTATIVE SET WAS REVIEWED WITH CITY OF ATLANTA ON 03/08/2022 BEFORE SUBMITTING FOR PERMIT.
M. CONVERGIN, MITEC, AND LOW VOLTAGE WIRING ADDED BY OWNER.

WSP USA Buildings Inc.
3340 Peachtree Road, NE,
Suite 1100
Atlanta, GA 30326
(404) 815-4152
wsp.com

HLGstudio
1401 Peachtree St.
Suite 200
Atlanta, Georgia 30309
404.760.7788
404.760.7787 - Fx.
www.HLGstudio.com

SHEAR STRUCTURAL
931 Monroe Dr.
Suite A102-491
Atlanta, GA 30308
(678) 664-8051
Shearstructural.com

Grady Legal Hall HVAC Modifications and Health Equity Suite Renovation
36 Jesse Hill Jr. Dr. SE
Atlanta, Georgia

PROJECT NORTH

Issue	Date & Description	By
	03/18/2025 ISSUED FOR CONSTRUCTION	

Drawn by **DP** Reviewed by **LR**

Seal/Signature

GEORGIA REGISTERED PROFESSIONAL ENGINEER No. PE-036180 3/18/2025 LEE K. ROBERSON

Project
GRADY LEGAL HALL HVAC MODIFICATIONS AND HEALTH EQUITY SUITE RENOVATION

Project Number

Sheet Title
LEVEL 2 ELECTRICAL POWER PLAN

Scale
As Indicated

Sheet Number
E.120

3/27/2025 4:12:48 PM Autodesk Docs://Grady Legal Hall/WSP-Grady Legal Hall-ELEC.rvt

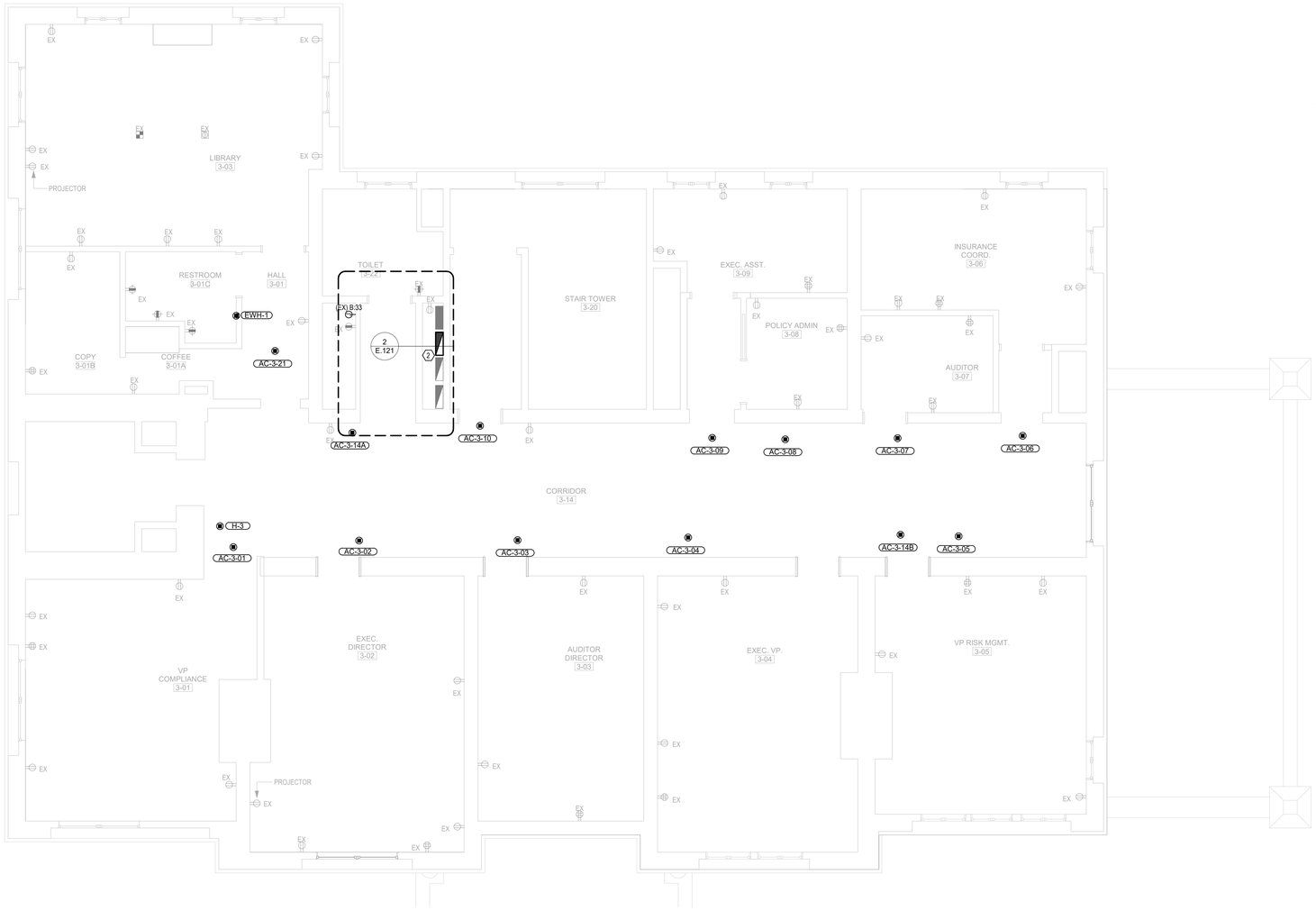

1 **LEVEL 3 POWER PLAN**
1/4" = 1'-0"

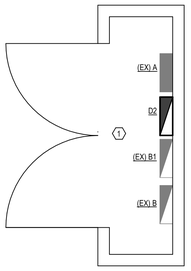

2 **LEVEL 3 ELECTRICAL ROOM**
N.T.S

GRAPHIC SCALE: 1/4" = 1'

0' 2' 4' 8'

KEY NOTES

1 EXISTING ELECTRICAL CLOSET IS EXISTING TO REMAIN. ARCHITECTURAL BACKGROUND MAY NOT ACCURATELY REPRESENT EXISTING CONDITIONS. ENSURE PROPER CLEARANCES ARE PROVIDED PER NEC. ANY ISSUES SHALL BE BROUGHT TO THE ATTENTION OF THE ENGINEER OF RECORD.

2 ELECTRICAL ROOM IS NOT DRAWN TO SCALE. REFER TO ENLARGED ELECTRICAL PLAN ON SHEET E.121 FOR MORE INFORMATION.

GENERAL NOTES

A. BRANCH CIRCUIT WIRING SHALL BE A MINIMUM OF 3#12 CONDUCTORS INCLUDING GROUND CONDUCTORS UNLESS OTHERWISE INDICATED OR AS INDICATED BELOW:
   A. FOR 120V, 20A CIRCUITS 75' OR GREATER PROVIDE #10 AWG HOMERUN CONDUCTORS.
   B. FOR 120V, 20A CIRCUITS 150' OR GREATER PROVIDE #8 AWG HOMERUN CONDUCTORS.
   C. FOR 277V, 20A CIRCUITS 150' OR GREATER PROVIDE #10 AWG HOMERUN CONDUCTORS.
B. VERIFY EXACT LOCATION OF POWER, DATA, AND VOICE (TELEPHONE) OUTLETS WITH ARCHITECTURAL DRAWINGS. COORDINATE DISCREPANCIES WITH THE ARCHITECT AND ENGINEER. COORDINATE FINISH COLORS OF ALL DEVICES WITH THE ARCHITECT.
C. REFER TO ARCHITECTURAL ELEVATIONS TO DETERMINE ORIENTATION OF ABOVE COUNTER RECEPTACLES, I.E. HORIZONTAL OR VERTICAL.
D. REFER TO ARCHITECTURAL, STRUCTURAL AND MECHANICAL DRAWINGS FOR GUIDANCE AND VERIFICATION OF DIMENSIONS, CEILING HEIGHTS, DOOR SWINGS, ROOM FINISHES AND LOCATION OF DUCTWORK, PIPES, STRUCTURAL STEEL, EQUIPMENT, CABINET WORK AND FURNITURE.
E. PENETRATIONS OF STRUCTURAL ELEMENTS, WALLS, FLOORS AND ROO'FS FOR THE PASSAGE OF RACEWAYS SHALL BE APPROVED BY THE STRUCTURAL ENGINEER. PENETRATIONS SHALL BE PROPERLY SEALED AFTER INSTALLATION SO AS TO MAINTAIN THE INTEGRITY OF THE SYSTEM PENETRATED.
F. INSTALL WALL LIGHTING FIXTURES, WALL SWITCHES, WALL OUTLETS AND OTHER WALL MOUNTED EQUIPMENT IN STRICT COORDINATION WITH DETAILS, SECTIONS, ELEVATIONS AND ROOM FINISHES SHOWN ON ARCHITECTURAL DRAWINGS.
G. WALL AND FLOOR MOUNTED POWER RECEPTACLES SHOWN NEAR DATA OUTLETS SHALL BE LOCATED WITHIN SIX (6) INCHES OF THE DATA OUTLET. LOCATE AT SAME MOUNTING HEIGHT UNLESS NOTED OTHERWISE.
H. CIRCUIT DESIGNATION IS BASED UPON FIELD INVESTIGATION OF CIRCUIT BREAKERS, CIRCUIT DIRECTORIES, AND EXISTING DRAWINGS. CONTRACTOR SHALL VERIFY THAT ASSIGNED CIRCUITS ARE AVAILABLE AND MAINTAIN THE INTEGRITY OF CIRCUITS OUTSIDE OF THE AREA OF DEMOLITION.
I. MEMBRANE PENETRATIONS OF MAXIMUM 2-HOUR FIRE-RESISTANCE-RATED WALLS AND PARTITIONS BY STEEL ELECTRICAL BOXES SHALL BE IN ACCORDANCE WITH IBC ARTICLE 714.4.2. WHERE THE SPACING REQUIREMENTS OF THIS ARTICLE CANNOT BE MET, STEEL BOXES SHALL BE PROTECTED WITH UL LISTED PUTTY PADS OR BY OTHER LISTED MATERIALS AND METHODS.
J. DESIGNATION 'EX' REPRESENTS EXISTING DEVICE OR LIGHT FIXTURE TO REMAIN AS CIRCUITED AND SWITCHED UNLESS NOTED OTHERWISE. EXISTING LIGHT FIXTURES SHALL BE CLEANED AND REPAIRED AS REQUIRED.
K. EXISTING RACEWAYS AND ELECTRICAL BOXES IN GOOD CONDITION MAY BE REUSED FOR NEW DEVICES IF IN APPROXIMATE LOCATION AS DEVICES SHOWN.
L. EXISTING CONDITIONS TO REMAIN. ALL NEW WORK INSTALLED TO MEET CURRENT CODE REQUIREMENTS. PRELIMINARY ANNOTATIVE SET WAS REVIEWED WITH CITY OF ATLANTA ON 03/06/2022 BEFORE SUBMITTING FOR PERMIT.
M. CONVERGIN, MITEC, AND LOW VOLTAGE WIRING ADDED BY OWNER.

WSP USA Buildings Inc.
3340 Peachtree Road, NE,
Suite 1100
Atlanta, GA 30326
(404) 815-4152
wsp.com

HLGstudio
1401 Peachtree St.
Suite 200
Atlanta, Georgia 30309
404.760.7788
404.760.7787 - Fx.
www.HLGstudio.com

SHEAR STRUCTURAL
931 Monroe Dr.
Suite A102-491
Atlanta, GA 30308
(678) 664-8051
Shearstructural.com

Grady Legal Hall HVAC Modifications and
Health Equity Suite Renovation
36 Jesse Hill Jr. Dr. SE
Atlanta, Georgia

PROJECT NORTH

Issue	Date & Description	By
	03/18/2025 ISSUED FOR CONSTRUCTION	

Drawn by **DP** Reviewed by **LR**

Seal/Signature

Project
GRADY LEGAL HALL HVAC MODIFICATIONS AND HEALTH EQUITY SUITE RENOVATION

Project Number

Sheet Title
LEVEL 3 ELECTRICAL POWER PLAN

Scale
As Indicated

Sheet Number
E.121

3/27/2025 4:12:48 PM Autodesk Docs://Grady Legal Hall/WSP-Grady Legal Hall-ELEC.rvt

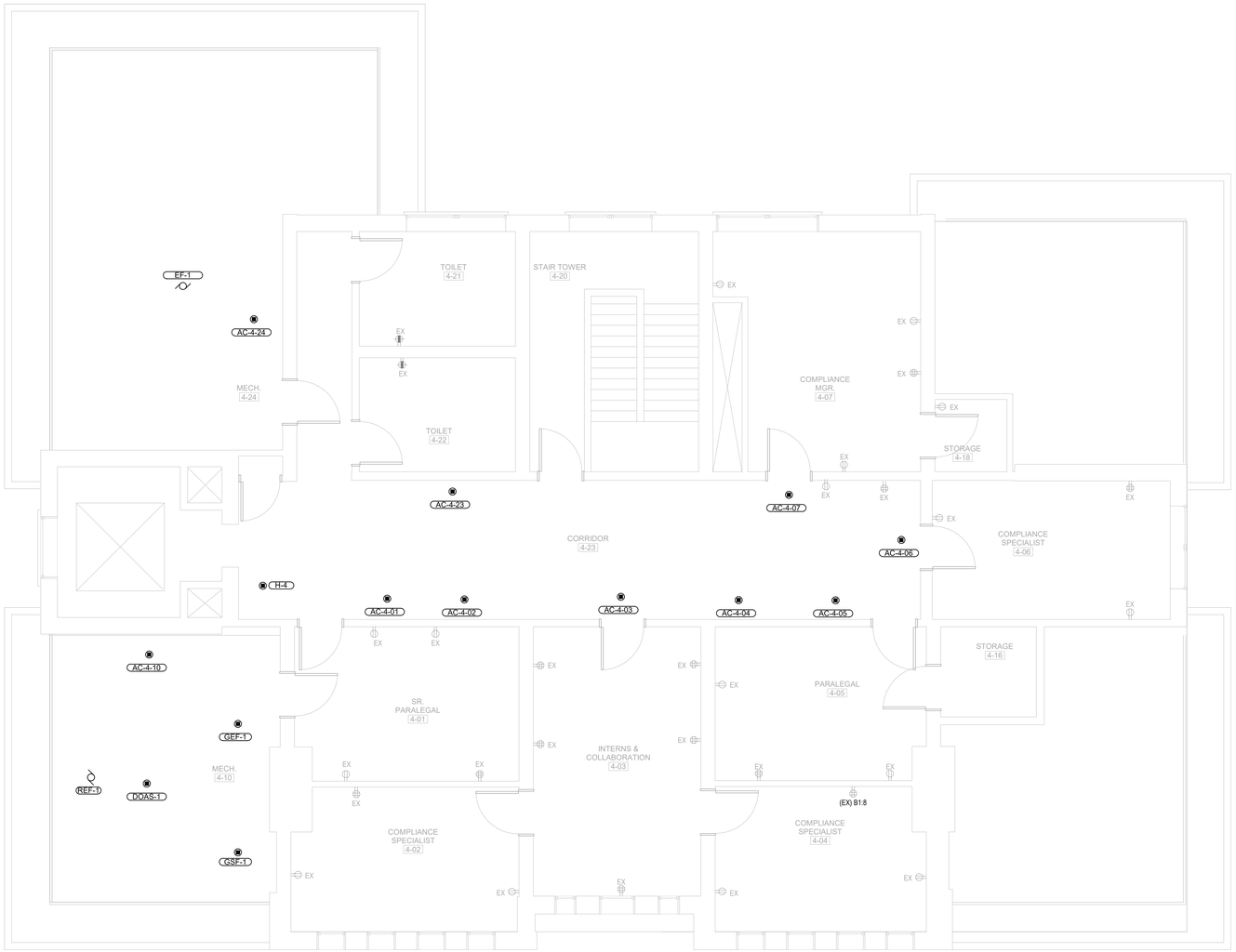

1 **LEVEL 4 POWER PLAN**
1/4" = 1'-0"

GRAPHIC SCALE: 1/4" = 1'
0' 2' 4' 8'

KEY NOTES

GENERAL NOTES

A. BRANCH CIRCUIT WIRING SHALL BE A MINIMUM OF 3#12 CONDUCTORS INCLUDING GROUND CONDUCTORS UNLESS OTHERWISE INDICATED OR AS INDICATED BELOW:
   A. FOR 120V, 20A CIRCUITS 75' OR GREATER PROVIDE #10 AWG HOMERUN CONDUCTORS.
   B. FOR 120V, 20A CIRCUITS 150' OR GREATER PROVIDE #8 AWG HOMERUN CONDUCTORS.
   C. FOR 277V, 20A CIRCUITS 150' OR GREATER PROVIDE #10 AWG HOMERUN CONDUCTORS.
B. VERIFY EXACT LOCATION OF POWER, DATA, AND VOICE (TELEPHONE) OUTLETS WITH ARCHITECTURAL DRAWINGS. COORDINATE DISCREPANCIES WITH THE ARCHITECT AND ENGINEER. COORDINATE FINISH COLORS OF ALL DEVICES WITH THE ARCHITECT.
C. REFER TO ARCHITECTURAL ELEVATIONS TO DETERMINE ORIENTATION OF ABOVE COUNTER RECEPTACLES, I.E. HORIZONTAL OR VERTICAL.
D. REFER TO ARCHITECTURAL, STRUCTURAL AND MECHANICAL DRAWINGS FOR GUIDANCE AND VERIFICATION OF DIMENSIONS, CEILING HEIGHTS, DOOR SWINGS, ROOM FINISHES AND LOCATION OF DUCTWORK, PIPES, STRUCTURAL STEEL, EQUIPMENT, CABINET WORK AND FURNITURE.
E. PENETRATIONS OF STRUCTURAL ELEMENTS, WALLS, FLOORS AND ROOFS FOR THE PASSAGE OF RACEWAYS SHALL BE APPROVED BY THE STRUCTURAL ENGINEER. PENETRATIONS SHALL BE PROPERLY SEALED AFTER INSTALLATION SO AS TO MAINTAIN THE INTEGRITY OF THE SYSTEM PENETRATED.
F. INSTALL WALL LIGHTING FIXTURES, WALL SWITCHES, WALL OUTLETS AND OTHER WALL MOUNTED EQUIPMENT IN STRICT COORDINATION WITH DETAILS, SECTIONS, ELEVATIONS AND ROOM FINISHES SHOWN ON ARCHITECTURAL DRAWINGS.
G. WALL AND FLOOR MOUNTED POWER RECEPTACLES SHOWN NEAR DATA OUTLETS SHALL BE LOCATED WITHIN SIX (6) INCHES OF THE DATA OUTLET. LOCATE AT SAME MOUNTING HEIGHT UNLESS NOTED OTHERWISE.
H. CIRCUIT DESIGNATION IS BASED UPON FIELD INVESTIGATION OF CIRCUIT BREAKERS, CIRCUIT DIRECTORIES, AND EXISTING DRAWINGS. CONTRACTOR SHALL VERIFY THAT ASSIGNED CIRCUITS ARE AVAILABLE AND MAINTAIN THE INTEGRITY OF CIRCUITS OUTSIDE OF THE AREA OF DEMOLITION.
I. MEMBRANE PENETRATIONS OF MAXIMUM 2-HOUR FIRE-RESISTANCE-RATED WALLS AND PARTITIONS BY STEEL ELECTRICAL BOXES SHALL BE IN ACCORDANCE WITH IBC ARTICLE 714.4.2. WHERE THE SPACING REQUIREMENTS OF THIS ARTICLE CANNOT BE MET, STEEL BOXES SHALL BE PROTECTED WITH UL LISTED PUTTY PADS OR BY OTHER LISTED MATERIALS AND METHODS.
J. DESIGNATION 'EX' REPRESENTS EXISTING DEVICE OR LIGHT FIXTURE TO REMAIN AS CIRCUITED AND SWITCHED UNLESS NOTED OTHERWISE. EXISTING LIGHT FIXTURES SHALL BE CLEANED AND REPAIRED AS REQUIRED.
K. EXISTING RACEWAYS AND ELECTRICAL BOXES IN GOOD CONDITION MAY BE REUSED FOR NEW DEVICES IF IN APPROXIMATE LOCATION AS DEVICES SHOWN.
L. EXISTING CONDITIONS TO REMAIN. ALL NEW WORK INSTALLED TO MEET CURRENT CODE REQUIREMENTS. PRELIMINARY ANNOTATIVE SET WAS REVIEWED WITH CITY OF ATLANTA ON 03/08/2022 BEFORE SUBMITTING FOR PERMIT.
M. CONVERGIN, MITEC, AND LOW VOLTAGE WIRING ADDED BY OWNER.

WSP USA Buildings Inc.
3340 Peachtree Road, NE,
Suite 1100
Atlanta, GA 30326
(404) 815-4152
wsp.com

HLGstudio
1401 Peachtree St.
Suite 200
Atlanta, Georgia 30309
404.760.7788
404.760.7787 - Fx.
www.HLGstudio.com

SHEAR STRUCTURAL
931 Monroe Dr.
Suite A102-491
Atlanta, GA 30308
(678) 664-8051
Shearstructural.com

Grady Legal Hall HVAC Modifications and
Health Equity Suite Renovation
36 Jesse Hill Jr. Dr. SE
Atlanta, Georgia

PROJECT NORTH

Issue	Date & Description	By
	03/18/2025 ISSUED FOR CONSTRUCTION	

Drawn by **DP** Reviewed by **LR**

Seal/Signature

GEORGIA REGISTERED PROFESSIONAL ENGINEER No. PE036180 3/18/2025 LEE K. ROBERSON

Project
GRADY LEGAL HALL HVAC MODIFICATIONS AND HEALTH EQUITY SUITE RENOVATION

Project Number

Sheet Title
LEVEL 4 ELECTRICAL POWER PLAN

Scale
As Indicated

Sheet Number
E.122

3/27/2025 4:12:48 PM Autodesk Docs://Grady Legal Hall/WSP-Grady Legal Hall-ELEC.rvt

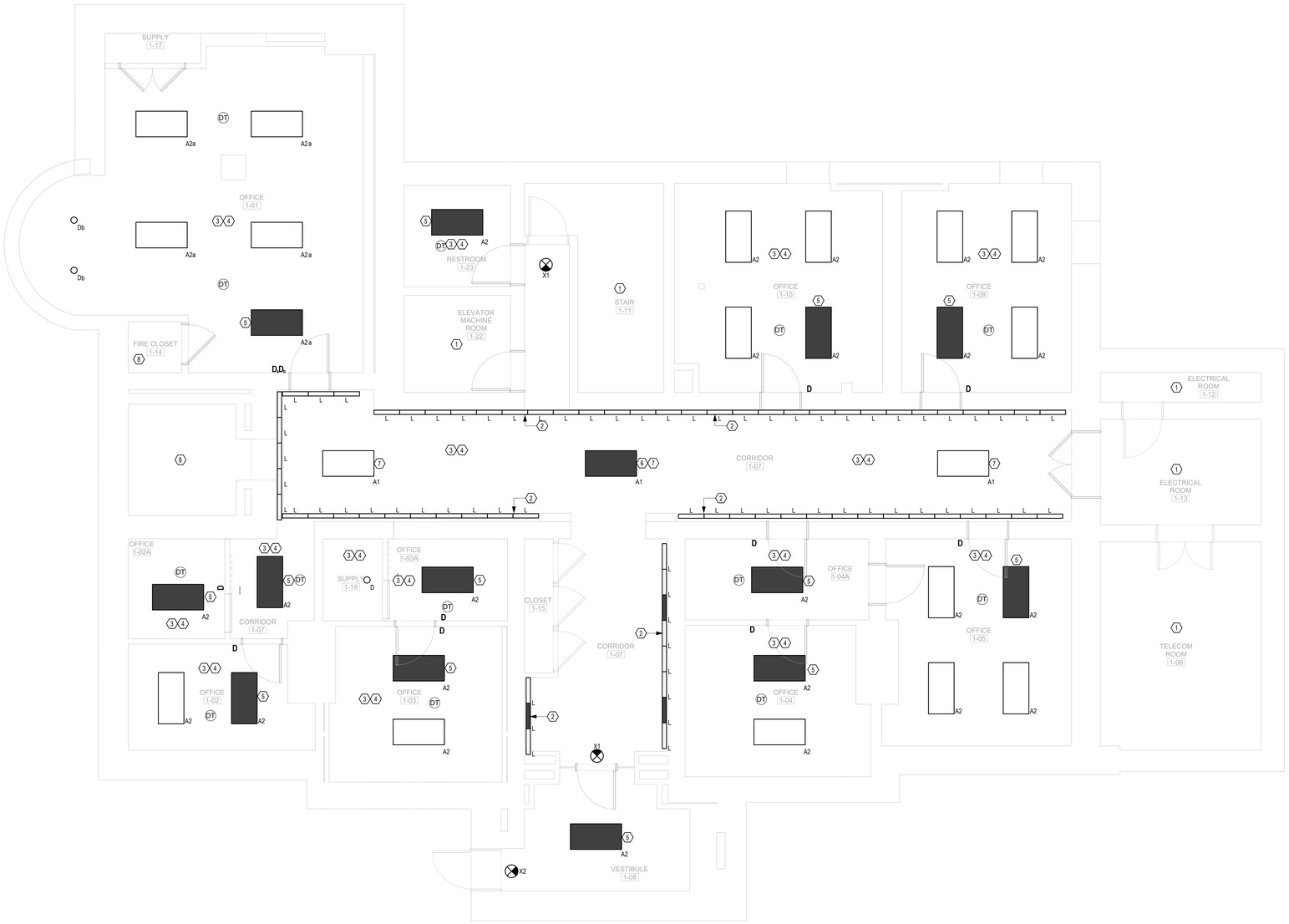

1 **Level 1**
1/4" = 1'-0"

GRAPHIC SCALE: 1/4" = 1'

0' 2' 4' 8'

KEY NOTES

1. EXISTING LIGHT FIXTURES AND CONTROL DEVICES WITHIN SPACE ARE EXISTING TO REMAIN. IF EXISTING LIGHTING CIRCUIT IS INTERRUPTED AS PART OF RENOVATION, RECONNECT EXISTING NORMAL LIGHT FIXTURES TO NEAREST NORMAL LIGHTING CIRCUIT, AND RECONNECT EXISTING EMERGENCY FIXTURES TO NEAREST LIFE SAFETY/EMERGENCY CIRCUIT.
2. LIGHT FIXTURE MOUNTED IN EXISTING CEILING CAVITY. TYPICAL FOR ALL TYPE "L" FIXTURES IN CORRIDOR.
3. NEW LIGHT FIXTURES SHALL BE INSTALLED WITHIN SPACE. LIGHTING CONTROLS ARE EXISTING TO REMAIN. IF EXISTING LIGHTING CIRCUIT IS INTERRUPTED AS PART OF RENOVATION, RECONNECT EXISTING NORMAL LIGHT FIXTURES TO NEAREST NORMAL LIGHTING CIRCUIT, AND RECONNECT EXISTING EMERGENCY FIXTURES TO NEAREST LIFE SAFETY/EMERGENCY CIRCUIT.
4. DEMOLISH LIGHT FIXTURES IN SPACE. STUB UP EXISTING LIGHTING CIRCUIT SERVING THE SPACE WITH INTENT TO CONNECT TO NEW LIGHTING FIXTURES.
5. EMERGENCY FIXTURE SHALL HAVE A BATTERY BACKUP WITH 90 MINUTES OF RUN TIME. EMERGENCY FIXTURES SHALL BE CONTROLLABLE WITH THE ROOM LIGHTING CONTROLS. STAKP-24-3000LM-80-35K-COLT-MINI-EXT-MOVOLT-SLD-E10W
6. EMERGENCY FIXTURE SHALL HAVE A BATTERY BACKUP WITH 90 MINUTES OF RUN TIME. EMERGENCY FIXTURES SHALL BE CONTROLLABLE WITH THE ROOM LIGHTING CONTROLS. 24FPSL2SCT3-3500K-LOW-EL10W
7. CONNECT LIGHT FIXTURES TO EXISTING LIGHTING CONTROLS IN THE SPACE.
8. AREA NOT IN SCOPE.

GENERAL NOTES

A. ALL CEILING MOUNTED ITEMS SHALL BE INSTALLED IN ACCORDANCE WITH THE ARCHITECTURAL REFLECTED CEILING PLANS. IF A LOCATION FOR AN ITEM IS NOT SHOWN ON THE ARCHITECTURAL REFLECTED CEILING PLANS, VERIFY THE EXACT LOCATION OF THE ITEM WITH THE ARCHITECT/ENGINEER PRIOR TO INSTALLATION. THESE REQUIREMENTS APPLY TO ALL CEILING TYPES IN ALL AREAS.
B. ALL LIGHT FIXTURES SHOWN ARE CEILING/SURFACE MOUNTED UNLESS OTHERWISE NOTED.
C. UNLESS OTHERWISE NOTED, ALL CONTROL DEVICES SHALL CONTROL LIGHT FIXTURES LOCATED WITHIN SAME SPACE.
D. CONTRACTOR SHALL ENSURE ALL CONTROL DEVICES, INLCUDING DIMMING SWITCHES, ARE COMPATIBLE WITH THE FIXTURES BEING CONTROLLED AND RATED FOR THE REQUIRED WATTAGE.
E. LIGHTING CONTROL NOTES:
   a. CORRIDORS: NO CONTROLS REQUIRED IN THESE SPACES. LIGHT FIXTURES SHALL REMAIN CONSTANTLY ENERGIZED WITHOUT LOCAL SWITCHING.
   b. RESTROOMS, BREAKROOMS, PANTRY AREAS: OCCUPANCY SENSORS SHALL BE SET TO AUTOMATICALLY SWITCH LIGHTS ON AND OFF WITH LOCAL WALL MOUNTED OVERRIDE SWITCH. IF SWITCH IS OPERATED OR IF MOTION IS DETECTED, LIGHTS SHALL AUTOMATICALLY SWITCH ON TO 100% ILLUMINATION AND AUTOMATICALLY SWITCH OFF IF NO OCCUPANCY IS DETECTED AFTER 15 MINUTES OR IF WALL SWITCH IS SET TO 'OFF' POSITION.
   c. OFFICES, MEETING ROOMS, LIBRARY SPACES: LIGHT FIXTURES SHALL BE DIMMABLE BETWEEN 10%-100% ILLUMINATION VIA WALL MOUNTED DIMMING SWITCH. OCCUPANCY SENSOR SHALL BE SET TO VACANCY MODE ("AUTO OFF ONLY"). LIGHTS SHALL SWITCH ON WHEN WALL MOUNTED DIMMER SWITCH IS ACTIVATED AND AUTOMATICALLY SWITCH OFF NO OCCUPANCY IS DETECTED AFTER 15 MINUTESOR IF WALL SWITCH IS SET TO 'OFF' POSITION.
   d. ELECTRICAL/MECHANICAL ROOMS: LIGHTS SHALL BE CONTROLLED VIA WALL MOUNTED SWITCH WITHOUT AUTOMATIC CONTROLS.
F. REFER TO ARCHITECTURAL, STRUCTURAL AND MECHANICAL DRAWINGS FOR GUIDANCE AND VERIFICATION OF DIMENSIONS, CEILING HEIGHTS, DOOR SWINGS, ROOM FINISHES AND LOCATION OF DUCTWORK, PIPES, STRUCTURAL STEEL, EQUIPMENT, CABINET WORK AND FURNITURE.
G. INSTALL WALL LIGHTING FIXTURES, WALL SWITCHES, WALL OUTLETS AND OTHER WALL MOUNTED EQUIPMENT IN STRICT COORDINATION WITH DETAILS, SECTIONS, ELEVATIONS AND ROOM FINISHES SHOWN ON ARCHITECTURAL DRAWINGS.
H. FOR 120 V, 20 A CIRCUITS LESS THAN 75' IN LENGTH PROVIDE 2#12, 1#12G ~ 0.75"C. FOR 120 V, 20 A CIRCUITS 75' OR GREATER IN LENGTH PROVIDE 2#10, #10G ~ 0.75"C.
I. EXIT SIGNS SHALL BE CONNECTED TO THE EXISTING UNSWITCHED EGRESS LIGHTING CIRCUIT.
J. PROVIDE EMERGENCY EGRESS LIGHT FIXTURES AND EXIT SIGNS WITH INTEGRAL 90 MINUTE BATTERY.
K. SEE LUMINAIRE SCHEDULE ON SHEET E.800 FOR LIGHT FIXTURE SPECIFICATIONS.
L. EXISTING CONDITIONS TO REMAIN. ALL NEW WORK INSTALLED TO MEET CURRENT CODE REQUIREMENTS. PRELIMINARY ANNOTATIVE SET WAS REVIEWED WITH CITY OF ATLANTA ON 03/08/2022 BEFORE SUBMITTING FOR PERMIT.
M. CONVERGIN, MITEC, AND LOW VOLTAGE WIRING ADDED BY OWNER.

WSP USA Buildings Inc.
3340 Peachtree Road, NE,
Suite 1100
Atlanta, GA 30326
(404) 815-4152
wsp.com

HLGstudio
1401 Peachtree St.
Suite 200
Atlanta, Georgia 30309
404.760.7788
404.760.7787 - Fx.
www.HLGstudio.com

SHEAR STRUCTURAL
931 Monroe Dr.
Suite A102-491
Atlanta, GA 30308
(678) 664-8051
Shearstructural.com

Grady Legal Hall HVAC Modifications and
Health Equity Suite Renovation
36 Jesse Hill Jr. Dr. SE
Atlanta, Georgia

PROJECT NORTH

Issue	Date & Description	By
	03/18/2025 ISSUED FOR CONSTRUCTION	

Drawn by **DP** Reviewed by **LR**

Seal/Signature

GEORGIA REGISTERED PROFESSIONAL ARCHITECT 03/18/2025 LEE K. ROBERSON

Project
GRADY LEGAL HALL HVAC MODIFICATIONS AND HEALTH EQUITY SUITE RENOVATION

Project Number

Sheet Title
LEVEL 1 ELECTRICAL LIGHTING PLAN

Scale
1/4" = 1'-0"

Sheet Number
E.130

3/27/2025 4:12:50 PM Autodesk Docs://Grady Legal Hall/WSP-Grady Legal Hall-ELEC.rvt

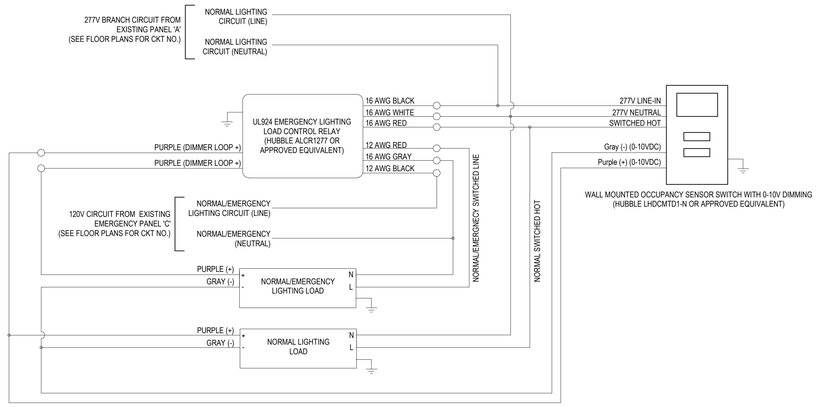

1 **UL924 EMERGENCY LIGHTING LOAD CONTROL RELAY WIRING DIAGRAM (TYPICAL FOR ROOMS WITH WALL MOUNTED OCCUPANCY SENSOR DIMMER SWITCH)**
N.T.S

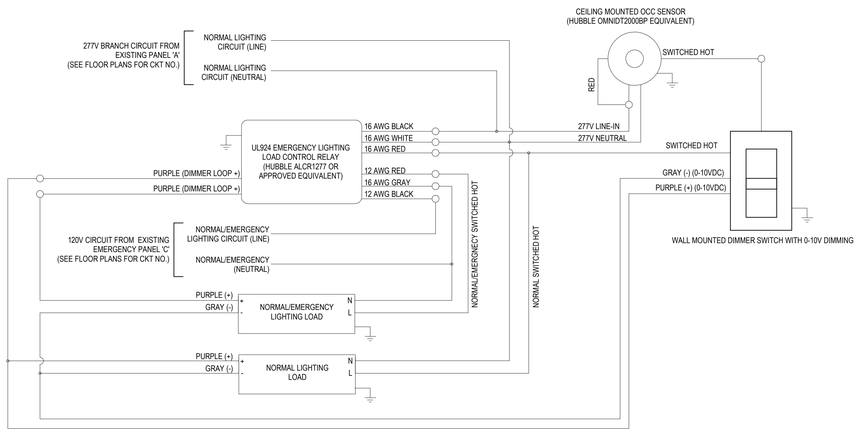

2 **UL924 EMERGENCY LIGHTING LOAD CONTROL RELAY WIRING DIAGRAM (TYPICAL FOR ROOMS WITH CEILING MOUNTED OCCUPANCY SENSOR AND WALL MOUNTED DIMMER SWITCH)**
N.T.S

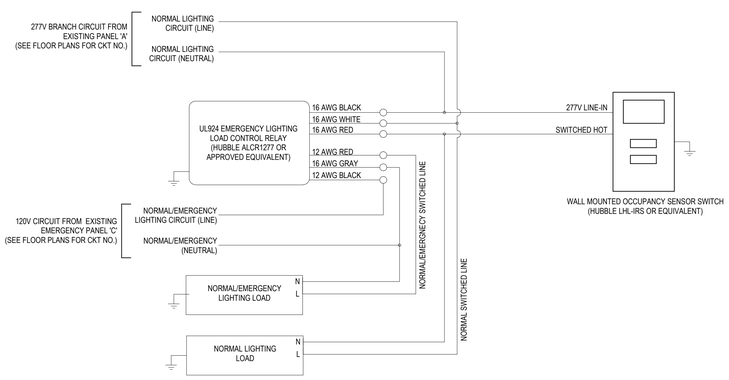

3 **UL924 EMERGENCY LIGHTING LOAD CONTROL RELAY WIRING DIAGRAM (TYPICAL FOR ROOMS WITH CEILING MOUNTED OCCUPANCY SENSOR AND WALL MOUNTED OCCUPANCY SENSOR SWITCH)**
N.T.S

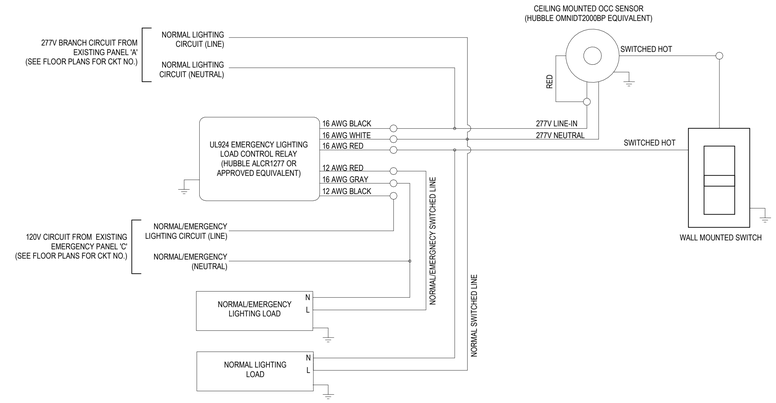

4 **UL924 EMERGENCY LIGHTING LOAD CONTROL RELAY WIRING DIAGRAM (TYPICAL FOR ROOMS WITH CEILING MOUNTED OCCUPANCY SENSOR AND WALL MOUNTED SWITCH)**
N.T.S

WSP USA Buildings Inc.
3340 Peachtree Road, NE,
Suite 1100
Atlanta, GA 30326
(404) 815-4152
wsp.com

HLGstudio
1401 Peachtree St.
Suite 200
Atlanta, Georgia 30309
404.760.7788
404.760.7787 - Fx.
www.HLGstudio.com

SHEAR STRUCTURAL
931 Monroe Dr.
Suite A102-491
Atlanta, GA 30308
(678) 664-8051
Shearstructural.com

Grady Legal Hall HVAC Modifications and Health Equity Suite Renovation
36 Jesse Hill Jr. Dr. SE
Atlanta, Georgia

PROJECT NORTH

Issue	Date & Description	By
	03/18/2025 ISSUED FOR CONSTRUCTION	

Drawn by **DP** Reviewed by **LR**

Seal/Signature

GEORGIA REGISTERED NO. PE024569 PROFESSIONAL ENGINEER 3/18/2025 LEE K. ROBERSON

Project
GRADY LEGAL HALL HVAC MODIFICATIONS AND HEALTH EQUITY SUITE RENOVATION

Project Number

Sheet Title
ELECTRICAL DETAILS

Scale
N/A

Sheet Number
E.500

3/27/2025 4:12:50 PM Autodesk Docs://Grady Legal Hall/WSP-Grady Legal Hall-ELEC.rvt

MDP

BUSSING: 800A
MAIN: 800AT/800AF MCB (LSI)
AIC RATING: 65kAIC
SCCA: 24.2kA

480Y/277 VOLTS, 3 PHASE, 4 WIRE

MOUNTING: SURFACE
SECTIONS: 1
LOCATION: ELEC RM
FED FROM: UTILITY

CKT NO.	LOAD TYPE	LOAD DESCRIPTION	TRIP RATING	# OF POLES	A		B		C		# OF POLES	TRIP RATING	LOAD DESCRIPTION	LOAD TYPE	CKT NO.
1	--	ELEVATOR	--	3	-- 472...						3	100 A	T-B	HVAC;...	2
3	--	--	--	--			-- 471...				--	--	--	--	4
5	--	--	--	--					-- 471...		--	--	--	--	6
7	HVAC;...	T-C	100 A	3	3697 258...						3	100 A	T-D	HVAC;...	8
9	--	--	--	--			624... 278...				--	--	--	--	10
11	--	--	--	--					599... 281...		--	--	--	--	12
13	Spare;...	A	20 A	3	4568 133...						3	20 A	EF-1	MTRS	14
15	--	--	--	--			466... 133...				--	--	--	--	16
17	--	--	--	--					346... 133...		--	--	--	--	18
19	HVAC	DOAS-1	20 A	3	1940 341...						3	110 A	CU-1	HVAC	20
21	--	--	--	--			194... 341...				--	--	--	--	22
23	--	--	--	--					194... 341...		--	--	--	--	24
25	HVAC	H-1	35 A	3	7150 715...						3	35 A	H-2	HVAC	26
27	--	--	--	--			715... 715...				--	--	--	--	28
29	--	--	--	--					715... 715...		--	--	--	--	30
31	HVAC	H-3	35 A	3	7150 715...						3	35 A	H-4	HVAC	32
33	--	--	--	--			715... 715...				--	--	--	--	34
35	--	--	--	--					715... 715...		--	--	--	--	36
37	--	SPACE	--	1	--	--					1	--	SPACE	--	38
39	--	SPACE	--	1			--	--			1	--	SPACE	--	40
41	--	SPACE	--	1					--	--	1	--	SPACE	--	42
PHASE A LOAD TOTAL					PHASE B LOAD TOTAL								PHASE C LOAD TOTAL		
117519.58 VA					118050.18 VA								116947.66 VA		

LOAD TYPE	CONNECTED LOAD	DEMAND FACTOR	ESTIMATED DEMAND
HVAC	264635 VA	100.00%	264635 VA
RCPTS	44340 VA	61.28%	27170 VA
LTS	11929 VA	125.00%	14911 VA
MTRS	5591 VA	117.85%	6588 VA
HEAT	20160 VA	100.00%	20160 VA
MISC	6008 VA	100.00%	6008 VA
L	27 VA	125.00%	33 VA

CONNECTED LOAD SUMMARY
352516.53 VA
424.01 A
ESITIMATED DEMAND LOAD SUMMARY
339292.04 VA
408.1 A

EXISTING LOAD BASED ON MAX 248.17 KVA METERED ON PANELBOARD UPSTREAM. THEN A 125% FACTOR APPPLIED FOR A TOTAL OF 310.21 KVA. METERING PERFORMED BETWEEN PERIOD 01/14/2025 - 02/13/2025.

EXISTIMG MDP PANEL METERING DATA

	TOTAL DESIGN KVA	LOAD ADDED	NET CHANGED	TOTAL LOAD	<	TOTAL CAPACITY
TOTAL DESIGN KVA	310.21 KVA	352.5 KVA	269.4 KVA	579.61 KVA		665 KVA

(EX) A

BUSSING: 100A
MAIN: 100A MLO
AIC RATING: EXISTING
SCCA: EXISTING

480Y/277 VOLTS, 3 PHASE, 4 WIRE

MOUNTING: SURFACE
SECTIONS: 1
LOCATION:
FED FROM: MDP

CKT NO.	LOAD TYPE	LOAD DESCRIPTION	TRIP RATING	# OF POLES	A		B		C		# OF POLES	TRIP RATING	LOAD DESCRIPTION	LOAD TYPE	CKT NO.
1	LTS	LTS - FIRST FLOOR (EX)	20 A	1	1000 10...						1	20 A	(EX) LTS - BASEMENT CORRIDOR	LTS	2
3	LTS	LTS - FIRST FLOOR (EX)	20 A	1			50... 83...				1	20 A	LTS - 3RD FLOOR CORRIDOR	LTS	4
5	LTS; L	LTS - 3RD FLOOR OFFICES & RR	20 A	1					17... 10...		1	20 A	(EX) LTS - OUTSIDE	LTS	6
7	LTS	LTS - FIRST FLOOR (EX)	20 A	1	500 11...						1	20 A	LTS - 2ND FLOOR CORRIDOR	LTS	8
9	LTS	LTS - 2ND FLOOR COLLAB, RR, OFFICES	20 A	1			16... 72...				1	20 A	LTS - 4TH FLOOR CORRIDOR	LTS	10
11	LTS	LTS - 4TH FLOOR OFFICES & RR	20 A	1					70... 89...		1	20 A	LTS- OFFICE 1-01	LTS	12
13	LTS	LTS - STAIRWELL (EX)	20 A	1	1000 0 VA						3	100 A	SPARE	--	14
15	HEAT	STAIRWELL HEATER (EX)	20 A	1			10... 0 VA				--	--	--	--	16
17	--	SPARE	20 A	1					0 VA	0 VA	--	--	--	--	18
19	--	SPARE	20 A	1	0	0 VA					1	20 A	SPARE	--	20
21	--	SPARE	20 A	1			0 VA	0 VA			1	20 A	SPARE	--	22
23	--	SPARE	20 A	1					0 VA	0 VA	1	20 A	SPARE	--	24
PHASE A LOAD TOTAL					PHASE B LOAD TOTAL								PHASE C LOAD TOTAL		
4568.46 VA					4663.41 VA								3461.92 VA		

LOAD TYPE	CONNECTED LOAD	DEMAND FACTOR	ESTIMATED DEMAND
LTS	11653 VA	125.00%	14567 VA
HEAT	1000 VA	100.00%	1000 VA
L	27 VA	125.00%	33 VA

CONNECTED LOAD SUMMARY
12665.19 VA
15.23 A
ESITIMATED DEMAND LOAD SUMMARY
15584.88 VA
18.75 A

(EX) B

BUSSING: 225
MAIN: 225A MLO
AIC RATING: EXISTING
SCCA: EXISTING

208Y/120 VOLTS, 3 PHASE, 4 WIRE

MOUNTING: SURFACE
SECTIONS: 1
LOCATION:
FED FROM: T-B (EX)

CKT NO.	LOAD TYPE	LOAD DESCRIPTION	TRIP RATING	# OF POLES	A		B		C		# OF POLES	TRIP RATING	LOAD DESCRIPTION	LOAD TYPE	CKT NO.
1	HVAC;...	PANEL "B1" (EX)	100 A	3	8574 10...						1	20 A	(EX) RCPTS - RMS 100,114,116	RCPTS	2
3	--	--	--	--			67... 10...				1	20 A	(EX) RCPTS - RMS 102,117	RCPTS	4
5	--	--	--	--					56... 10...		1	20 A	RCPTS - RM 104	RCPTS	6
7	RCPTS	RCPTS - RM 109 (EX)	20 A	1	1080 14...						1	20 A	RCPTS - RM 220	RCPTS	8
9	RCPTS	RCPTS RMS 203, 202 (EX)	20 A	1			14... 36...				1	20 A	(EX) RCPTS - RMS. 220, 219, 218	RCPTS	10
11	RCPTS	RCPTS - RMS 204, 205 (EX)	20 A	1					14... 10...		1	20 A	(EX) RCPTS - RMS 208, 209	RCPTS	12
13	RCPTS	RCPTS - RM 213, 212 (EX)	20 A	1	1440 10...						1	20 A	(EX) RCPTS - RM 201	RCPTS	14
15	RCPTS	RCPTS - RMS 106, 107, 108 (EX)	20 A	1			10... 72...				1	20 A	(EX) RCPTS - RM 314	RCPTS	16
17	RCPTS	RCPTS - RMS 222, 221 (EX)	20 A	1					36... 14...		1	20 A	(EX) RCPTS - RMS 302, 303	RCPTS	18
19	RCPTS	RCPTS - RM 206 (EX)	20 A	1	900 10...						1	20 A	(EX) RCPTS - RM 301,304	RCPTS	20
21	RCPTS	RCPTS - RM 211, 210 (EX)	20 A	1			14... 10...				1	20 A	(EX) RCPTS - RMS 309, 310	RCPTS	22
23	RCPTS	RCPTS - RMS 215, 216 (EX)	20 A	1					14... 12...		1	20 A	(EX) RCPTS - RM 313, 315, 312, 318	RCPTS	24
25	MTRS	DAMPER MOTORS (EX)	20 A	1	500 10...						1	20 A	(EX) RCPTS - RM 311	RCPTS	26
27	MTRS	EXHAUST FAN (EX)	20 A	1			20... 18...				1	20 A	(EX) ELEVATOR PIT	RCPTS	28
29	MTRS	EXHAUST FAN (EX)	20 A	1					20... 50...		1	20 A	(EX) HEAT TAPE	HEAT	30
31	MTRS	EXHAUST FAN (EX)	20 A	1	200 50...						1	20 A	(EX) TEI EQUIPMENT	MISC	32
33	MISC	CONDENSATE CHILLER	20 A	1			18... 30...				3	20 A	(EX) WATER HEATER	HEAT	34
35	RCPTS	DRINKING FOUNTAIN 1ST FLOOR (EX)	20 A	1					18... 30...		--	--	--	--	36
37	HEAT	HEAT TAPE (EX)	20 A	1	500 30...						--	--	--	--	38
39	HVAC	AHU 2ND/3RD FLOOR (EX)	60 A	3			37... 37...				3	60 A	(EX) AHU 1ST/3RD FLOOR	HVAC	40
41	--	--	--	--					37... 37...		--	--	--	--	42
43	--	--	--	--	3700 37...						--	--	--	--	44
45	HEAT	EWH-1 (EX)	30 A	2			20... 90...				1	20 A	(EX) RCPTS - RMS 307, 308	RCPTS	46
47	--	--	--	--					20... 10...		1	20 A	(EX) RCPTS - RM 316	RCPTS	48
PHASE A LOAD TOTAL					PHASE B LOAD TOTAL								PHASE C LOAD TOTAL		
29854.4 VA					27870.4 VA								28164 VA		

LOAD TYPE	CONNECTED LOAD	DEMAND FACTOR	ESTIMATED DEMAND
HVAC	27109 VA	100.00%	27109 VA
RCPTS	42840 VA	61.67%	26420 VA
MTRS	1100 VA	111.36%	1225 VA
HEAT	14160 VA	100.00%	14160 VA
MISC	680 VA	100.00%	680 VA

CONNECTED LOAD SUMMARY
85888.8 VA
238.4 A
ESITIMATED DEMAND LOAD SUMMARY
69593.8 VA
193.17 A

(EX) B1

BUSSING: 100A
MAIN: 100A MLO
AIC RATING: 10kAIC
SCCA: 3.42kA

208Y/120 VOLTS, 3 PHASE, 4 WIRE

MOUNTING: SURFACE
SECTIONS: 1
LOCATION:
FED FROM: (EX) B

CKT NO.	LOAD TYPE	LOAD DESCRIPTION	TRIP RATING	# OF POLES	A		B		C		# OF POLES	TRIP RATING	LOAD DESCRIPTION	LOAD TYPE	CKT NO.
1	RCPTS	RCPTS - RMS 112,113 (EX)	20 A	1	1080 900...						1	20 A	(EX) RCPTS - RM 404	RCPTS	2
3	RCPTS	RCPTS - 100,101 (EX)	20 A	1			108... 108...				1	20 A	(EX) RCPTS - RMS 402, CORRIDOR	RCPTS	4
5	HVAC	RM 304 A/C (EX)	20 A	2					166... 108...		1	20 A	(EX) RCPTS - RM 410	RCPTS	6
7	--	--	--	--	1664 144...						1	20 A	(EX) RCPTS - RMS 405, 408	RCPTS	8
9	RCPTS	RCPTS - RM 407 (EX)	20 A	1			144... 900...				1	20 A	(EX) RCPTS - RMS 409, CORRIDOR	RCPTS	10
11	RCPTS	RCPTS - RMS 305, 304 (EX)	20 A	1					900... 180...		1	20 A	(EX) ICE MAKER	RCPTS	12
13	RCPTS	RCPTS - RM 413, 414 (EX)	20 A	1	360 180...						1	20 A	(EX) COFFEE MAKER	RCPTS	14
15	RCPTS	PANTRY MICROWAVE (EX)	20 A	1			180... 180...				1	20 A	(EX) REFRIGERATOR	RCPTS	16
17	RCPTS	MULTI-FUNCTION COPY CORRIDOR (EX)	20 A	1					360... 180...		1	20 A	(EX) PANTRY MICROWAVE	RCPTS	18
19	RCPTS	RCPTS - RM 307 (EX)	20 A	1	900 180...						1	20 A	(EX) PROJECTOR - LIBRARY	RCPTS	20
21	RCPTS	RECPTS - LARGE COLLAB BK SHELF LTG (EX)	20 A	1			720... 180...				1	20 A	(EX) PROJECTOR - COLLAB. ROOM	RCPTS	22
23	RCPTS	RCPTS - LIBRARY BK SHELF LTG (EX)	20 A	1					540... 720...		1	20 A	(EX) RCPTS - RM 309	RCPTS	24
25	RCPTS	RCPTS - RMS 110,111 (EX)	20 A	1	1080 790...						2	20 A	REF-1	HVAC	26
27	RCPTS	REFRIGERATOR - RM 201A (EX)	20 A	1			180... 790...				--	--	--	--	28
29	--	SPARE	20 A	1					0 VA	0 VA	1	20 A	SPARE	--	30
31	--	SPARE	20 A	1	0	0 VA					1	20 A	SPARE	--	32
33	--	SPARE	20 A	1			0 VA	0 VA			1	20 A	SPARE	--	34
35	--	SPARE	20 A	1					0 VA	0 VA	1	20 A	SPARE	--	36
37	--	SPARE	20 A	1	0	0 VA					1	20 A	SPARE	--	38
39	--	SPARE	20 A	1			0 VA	0 VA			1	20 A	SPARE	--	40
41	--	SPARE	20 A	1					0 VA	0 VA	1	20 A	SPARE	--	42
PHASE A LOAD TOTAL					PHASE B LOAD TOTAL								PHASE C LOAD TOTAL		
8574.4 VA					6730.4 VA								5624 VA		

LOAD TYPE	CONNECTED LOAD	DEMAND FACTOR	ESTIMATED DEMAND
HVAC	4909 VA	100.00%	4909 VA
RCPTS	16020 VA	81.21%	13010 VA

CONNECTED LOAD SUMMARY
20928.8 VA
58.09 A
ESITIMATED DEMAND LOAD SUMMARY
17918.8 VA
49.74 A

(EX) C

BUSSING: 100A
MAIN: 100AT/100AF MCB (LSI)
AIC RATING: EXISTING
SCCA: EXISTING

208Y/120 VOLTS, 3 PHASE, 4 WIRE

MOUNTING: SURFACE
SECTIONS: 1
LOCATION:
FED FROM: T-C

CKT NO.	LOAD TYPE	LOAD DESCRIPTION	TRIP RATING	# OF POLES	A		B		C		# OF POLES	TRIP RATING	LOAD DESCRIPTION	LOAD TYPE	CKT NO.
1	LTS	EMERGENCY LTS - FIRST FLOOR (EX)	20 A	1	160 12...						1	20 A	(EX) EMERGENCY LTS - BASEMENT	LTS	2
3	--	SPARE	20 A	1			0 VA	16...			2	20 A	(EX) EXISTING LOAD	MISC	4
5	--	SPARE	20 A	1					0 VA	16...	--	--	--	--	6
7	MISC	FIRE ALARM (EX)	20 A	1	500 0 VA						1	20 A	SPARE	--	8
9	MISC	SECURITY SYSTEM (EX)	20 A	2			25... 16...				2	20 A	(EX) SPOT COOLER	HVAC	10
11	--	--	--	--					25... 16...		--	--	--	--	12
13	--	SPARE	20 A	1	0	10...					1	20 A	(EX) ELEVATOR CONTROLLER	MISC	14
15	RCPTS	COMM ROOM (EX)	20 A	1			50... 0 VA				1	20 A	SPARE	--	16
17	HEAT	HEATER - VEST (EX)	20 A	3					16... 25...		2	20 A	(EX) EMERGENCY ATTIC FAN	MTRS	18
19	--	--	--	--	1667 25...						--	--	--	--	20
21	--	--	--	--			16... 50...				2	20 A	(EX) RCPTS - COMM ROOM UPS	RCPTS	22
23	--	SPACE	--	1					--	50...	--	--	--	--	24
25	--	MAIN	100 A	3	0	0 VA					2	20 A	SPARE	--	26
27	--	--	--	--			0 VA	0 VA			--	--	--	--	28
29	--	--	--	--					0 VA	0 VA	1	20 A	SPARE	--	30
PHASE A LOAD TOTAL					PHASE B LOAD TOTAL								PHASE C LOAD TOTAL		
3696.67 VA					6244.67 VA								5994.67 VA		

LOAD TYPE	CONNECTED LOAD	DEMAND FACTOR	ESTIMATED DEMAND
HVAC	3328 VA	100.00%	3328 VA
RCPTS	1500 VA	100.00%	1500 VA
LTS	280 VA	125.00%	350 VA
MTRS	500 VA	125.00%	625 VA
HEAT	5000 VA	100.00%	5000 VA
MISC	5328 VA	100.00%	5328 VA

CONNECTED LOAD SUMMARY
15936 VA
44.23 A
ESITIMATED DEMAND LOAD SUMMARY
16131 VA
44.78 A

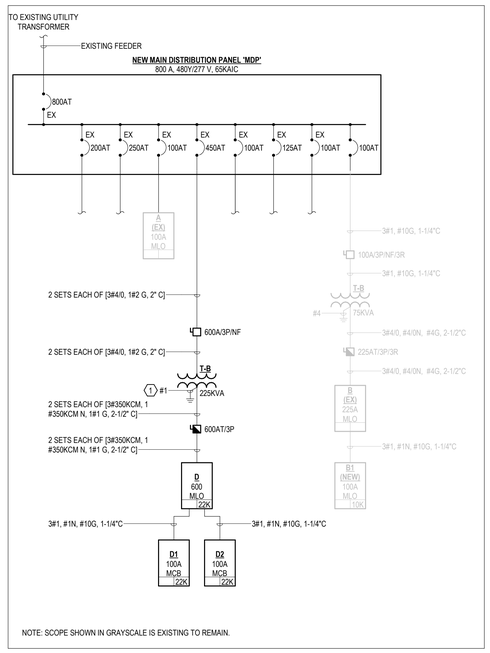

1 **ELECTRICAL PARTIAL SINGLE-LINE DIAGRAM**
N.T.S

KEY NOTES

1 GROUND TRANSFORMER TO MAIN GROUND BAR LOCATED IN MAIN ELECTRICAL ROOM ON LEVEL 1.

GENERAL NOTES

A. PROVIDE UPDATED, TYPE WRITTEN CIRCUIT DIRECTORY FOR ALL CIRCUITS WITH LOAD DEFINITIONS FOR EACH PANELBOARD. DIRECTORY SHALL BE LOCATED INSIDE PANEL DOOR.
B. THE AIC RATING FOR NEW BRANCH CIRCUIT BREAKERS INSTALLED IN EXISTING PANELBOARDS SHALL MATCH EXISTING CIRCUIT BREAKERS WITHIN ASSOCIATED PANEL.
C. BRANCH CIRCUITS NOTED AS "EX" ARE EXISTING TO REMAIN. ELECTRICAL LOADS FOR EXISTING CIRCUITS WERE ASSIGNED USING EXISTING DRAWINGS OR USING CONSERVATIVE VALUES BASED ON ENGINEERING ASSUMPTION.
D. BRANCH CIRCUIT BREAKERS LEFT UNCONNECTED AS PART OF RENOVATION SHALL REMAIN AS SPARE.

WSP USA Buildings Inc.
3340 Peachtree Road, NE,
Suite 1100
Atlanta, GA 30326
(404) 815-4152
wsp.com

HLGstudio
1401 Peachtree St.
Suite 200
Atlanta, Georgia 30309
404.760.7788
404.760.7787 - Fx.
www.HLGstudio.com

SHEAR STRUCTURAL
931 Monroe Dr.
Suite A102-491
Atlanta, GA 30308
(678) 664-8051
Shearstructural.com

Grady Legal Hall HVAC Modifications and Health Equity Suite Renovation
36 Jesse Hill Jr. Dr. SE
Atlanta, Georgia

PROJECT NORTH

Issue	Date & Description	By
03/18/2025	ISSUED FOR CONSTRUCTION	

Drawn by DP Reviewed by LR

Seal/Signature

GEORGIA REGISTERED PROFESSIONAL ENGINEER LEE K. ROBERSON 3/18/2025 NOT VALID WITHOUT ORIGINAL SEAL

Project
GRADY LEGAL HALL HVAC MODIFICATIONS AND HEALTH EQUITY SUITE RENOVATION

Project Number

Sheet Title
ELECTRICAL SCHEDULES

Scale
N/A

Sheet Number
E.800

3/27/2025 4:12:50 PM Autodesk Docs://Grady Legal Hall/WSP-Grady Legal Hall-ELEC.rvt

LUMINAIRE SCHEDULE

Type	Manufacturer	Model	Voltage	Mounting Method	Apparent Load	Description
A1	COOPER LIGHTING	24FPSL2SCT3-350 0K-LOW	120V	RECESSSED	27 VA	2' X 4' VOLUMETRIC DIRECT/INDIRECT LUMINAIRE WITH CENTER LENSE, GAUGE COLD ROLLED STEEL, AND MATTE WHITE FINISH. ROLLED STEEL, AND MATTE WHITE FINISH.
A2	LITHONIA	STAKP-24-3000LM -80-35K-COLT-MIN 1-EXT-MOVOLT-S LD-	120V	SURFACE	22 VA	2' X 4' VOLUMETRIC DIRECT/INDIRECT LUMINAIRE WITH CENTER LENSE, GAUGE COLD ROLLED STEEL, AND MATTE WHITE FINISH. ROLLED STEEL, AND MATTE WHITE FINISH.
D	GOTHAM	IVO6S-D-15LM-35 K-80CRI-MD-MIN1 0-MVOLT	120V	RECESSED	13 VA	6" LED ROUND DOWNLIGHT
L	VODE	807-NX3-SL-_-AE -120V-0-Z-LG-35	120V	SURFACE	13 VA	NEXA 3/8" LINEAR SURFACE MOUNT FIXTURE (IF POSSIBLE, MATCH LINEAR LIGHT ON UPPER FLOORS), CRITICAL EDGE, CLEAR ANODIZED
X1	LIGHTALARMS	SLEDN-A-R-C-D-*	120V	SURFACE/CEILING	5 VA	UNIVERSAL MOUNT EDGE LIT EXIT SIGN, RED LETTERING

COMcheck Software Version COMcheckWeb

Interior Lighting Compliance Certificate

Project Information

Energy Code: 2018 IECC
Project Title: Grady Georgia Hall Level 1
Project Type: Alteration

Construction Site:
36 Butler Street, S.E.
Atlanta, Georgia 30335

Owner/Agent:
GRADY

Designer/Contractor:
WSP

Allowed Interior Lighting Power

A Area Category	B Floor Area (ft2)	C Allowed Watts / ft2	D Allowed Watts
1-Common Space Types:Office - Enclosed	2494	0.93	2319
		Total Allowed Watts =	2319

Proposed Interior Lighting Power

A Fixture ID : Description / Lamp / Wattage Per Lamp / Ballast	B Lamps/ Fixture	C # of Fixture	D Fixture Watt.	E (C X D)
Common Space Types: Office - Enclosed (2494 sq.ft.)				
A2: LED Panel 33W:	1	29	22	638
A1: LED Panel 33W:	1	3	27	81
D: LED Other Fixture Unit 13W:	1	3	13	39
L: LED Linear 15W:	1	71	13	923
			Total Proposed Watts =	1681

Interior Lighting PASSES

Interior Lighting Compliance Statement

Compliance Statement: The proposed interior lighting alteration project represented in this document is consistent with the building plans, specifications, and other calculations submitted with this permit application. The proposed interior lighting systems have been designed to meet the 2018 IECC requirements in COMcheck Version COMcheckWeb and to comply with any applicable mandatory requirements listed in the Inspection Checklist.

Alex Brumfield - Senior Consultant, Electrical Engineering
Name - Title

Signature

3/18/2024
Date

Electrical Testing, Incorporated
2671 Cedartown Hwy. – Rome, GA 30161
Telephone 706-234-7623 – Fax 706-236-9028
E-Mail billy@electricaltestingine.com

Georgia Hall Ground Readings:

Upon visual inspection it appears to have a 4/0 ground from existing switchgear that runs to the outside earth. It is undetermined how many ground rods are installed or length between ground rods because all grounding material is below ground. ETI was able to use a clamp-on ground tester (AEMC Clamp-on Ground Tester) to record a 13.1ohms reading which meets NETA standards of 25ohms or less.

Sincerely,

Electrical Testing, Incorporated

Billy Davis

Billy Davis
Project Manager

D

BUSSING: 600A
MAIN: 225AT/225AF MCB (LSI)
AIC RATING: 22kAIC
SCCA: 12.7kA

208Y/120 VOLTS, 3 PHASE, 4 WIRE

MOUNTING: SURFACE
SECTIONS: 1
LOCATION: ELEC RM
FED FROM: T-D

CKT NO.	LOAD TYPE	LOAD DESCRIPTION	TRIP RATING	# OF POLES	A		B		C		# OF POLES	TRIP RATING	LOAD DESCRIPTION	LOAD TYPE	CKT NO.
1	HVAC	ODU-1	70 A	3	7458	714...					3	60 A	ODU-2:A	HVAC	2
3	--	--	--	--			745...	714...			--	--	--	--	4
5	--	--	--	--					745...	714...	--	--	--	--	6
7	HVAC	ODU-2:B	70 A	3	7458	110...					3	100 A	ODU-3:A	HVAC	8
9	--	--	--	--			745...	110...			--	--	--	--	10
11	--	--	--	--					745...	110...	--	--	--	--	12
13	HVAC	ODU-3:B	100 A	3	11012	222...					2	20 A	AC-1-01B	HVAC	14
15	--	--	--	--			110...	222...			--	--	--	--	16
17	--	--	--	--					110...	222...	2	20 A	AC-1-02	HVAC	18
19	HVAC	AC-1-01A	20 A	2	222	222...					--	--	--	--	20
21	--	--	--	--			222...	182...			2	20 A	AC-1-04	HVAC	22
23	HVAC	AC-1-03	20 A	2					182...	182...	--	--	--	--	24
25	--	--	--	--	182	25 VA					2	20 A	AC-1-06	HVAC	26
27	HVAC	AC-1-05	20 A	2			182...	25 VA			--	--	--	--	28
29	--	--	--	--					182...	0 VA	1	20 A	SPARE	--	30
31	--	SPARE	20 A	1	0	0 VA					1	20 A	SPARE	--	32
33	--	SPARE	20 A	1			0 VA	0 VA			1	20 A	SPARE	--	34
35	--	SPARE	20 A	1					0 VA	0 VA	1	20 A	SPARE	--	36
37	--	SPARE	20 A	1	0	224...					3	100 A	PANEL D1	HVAC;...	38
39	--	SPARE	20 A	1			0 VA	224...			--	--	--	--	40
41	--	SPARE	20 A	1					0 VA	234...	--	--	--	--	42
PHASE A LOAD TOTAL					PHASE B LOAD TOTAL						PHASE C LOAD TOTAL				
47201.5 VA					47161.98 VA						47194.22 VA				

LOAD TYPE	CONNECTED LOAD	DEMAND FACTOR	ESTIMATED DEMAND
HVAC	141558 VA	100.00%	141558 VA

CONNECTED LOAD SUMMARY
141557.7 VA
392.92 A
ESITMATED DEMAND LOAD SUMMARY
141557.7 VA
392.92 A

D1

BUSSING: 100A
MAIN: 100AT/100AF MCB (LSI)
AIC RATING: 22kAIC
SCCA: 12.7kA

208Y/120 VOLTS, 3 PHASE, 4 WIRE

MOUNTING: SURFACE
SECTIONS: 1
LOCATION: ELEC RM
FED FROM: D

CKT NO.	LOAD TYPE	LOAD DESCRIPTION	TRIP RATING	# OF POLES	A		B		C		# OF POLES	TRIP RATING	LOAD DESCRIPTION	LOAD TYPE	CKT NO.
1	HVAC	AC-1-07	20 A	2	222	46 VA					2	20 A	AC-1-08	HVAC	2
3	--	--	--	--			222...	46 VA			--	--	--	--	4
5	HVAC	AC-1-09	20 A	2					182...	182...	2	20 A	AC-1-10	HVAC	6
7	--	--	--	--	182	182...					--	--	--	--	8
9	HVAC	AC-2-01	20 A	2			182...	222...			2	20 A	AC-2-02	HVAC	10
11	--	--	--	--					182...	222...	--	--	--	--	12
13	HVAC	AC-2-03	20 A	2	182	222...					2	20 A	AC-2-04	HVAC	14
15	--	--	--	--			182...	222...			--	--	--	--	16
17	HVAC	AC-2-05	20 A	2					182...	222...	2	20 A	AC-2-06	HVAC	18
19	--	--	--	--	182	222...					--	--	--	--	20
21	HVAC	AC-2-07	20 A	2			222...	182...			2	20 A	AC-2-08	HVAC	22
23	--	--	--	--					222...	182...	--	--	--	--	24
25	HVAC	AC-2-09	20 A	2	182	222...					2	20 A	AC-2-10	HVAC	26
27	--	--	--	--			182...	222...			--	--	--	--	28
29	HVAC	AC-2-11	20 A	2					222...	182...	2	20 A	AC-2-12	HVAC	30
31	--	--	--	--	222	182...					--	--	--	--	32
33	HVAC	AC-2-17A	20 A	2			182...	182...			2	20 A	AC-2-17B	HVAC	34
35	--	--	--	--					182...	182...	--	--	--	--	36
37	--	SPARE	20 A	1	0	0 VA					1	20 A	SPARE	--	38
39	--	SPARE	20 A	1			0 VA	0 VA			1	20 A	SPARE	--	40
41	--	SPARE	20 A	1					0 VA	0 VA	1	20 A	SPARE	--	42
PHASE A LOAD TOTAL					PHASE B LOAD TOTAL						PHASE C LOAD TOTAL				
2245.36 VA					2245.36 VA						2342.08 VA				

LOAD TYPE	CONNECTED LOAD	DEMAND FACTOR	ESTIMATED DEMAND
HVAC	6833 VA	100.00%	6833 VA

CONNECTED LOAD SUMMARY
6832.8 VA
18.97 A
ESITMATED DEMAND LOAD SUMMARY
6832.8 VA
18.97 A

D2

BUSSING: 100A
MAIN: 100A M/O
AIC RATING: 22kAIC
SCCA: 12.7kA

208Y/120 VOLTS, 3 PHASE, 4 WIRE

MOUNTING: SURFACE
SECTIONS: 1
LOCATION:
FED FROM:

CKT NO.	LOAD TYPE	LOAD DESCRIPTION	TRIP RATING	# OF POLES	A		B		C		# OF POLES	TRIP RATING	LOAD DESCRIPTION	LOAD TYPE	CKT NO.
1	HVAC	AC-3-01	20 A	2	300	222...					2	20 A	AC-3-02	HVAC	2
3	--	--	--	--			300...	222...			--	--	--	--	4
5	HVAC	AC-3-03	20 A	2					182...	222...	2	20 A	AC-3-04	HVAC	6
7	--	--	--	--	182	222...					--	--	--	--	8
9	HVAC	AC-3-05	20 A	2			300...	222...			2	20 A	AC-3-06	HVAC	10
11	--	--	--	--					300...	222...	--	--	--	--	12
13	HVAC	AC-3-07	20 A	2	182	182...					2	20 A	AC-3-08	HVAC	14
15	--	--	--	--			182...	182...			--	--	--	--	16
17	HVAC	AC-3-09	20 A	2					222...	222...	2	20 A	AC-3-10	HVAC	18
19	--	--	--	--	222	222...					--	--	--	--	20
21	HVAC	AC-3-14A	20 A	2			182...	182...			2	20 A	AC-3-14B	HVAC	22
23	--	--	--	--					182...	182...	--	--	--	--	24
25	HVAC	AC-2-17C	20 A	2	222	222...					2	20 A	AC-2-20	HVAC	26
27	--	--	--	--			222...	222...			--	--	--	--	28
29	HVAC	AC-3-21	20 A	2					300...	456...	2	20 A	AC-2-24	HVAC	30
31	--	--	--	--	300	456...					--	--	--	--	32
33	HVAC	AC-2-38	20 A	2			456...	0 VA			1	20 A	SPARE	--	34
35	--	--	--	--					456...	0 VA	1	20 A	SPARE	--	36
37	--	SPARE	20 A	1	0	0 VA					1	20 A	SPARE	--	38
39	--	SPARE	20 A	1			0 VA	0 VA			1	20 A	SPARE	--	40
41	--	SPARE	20 A	1					0 VA	0 VA	1	20 A	SPARE	--	42
PHASE A LOAD TOTAL					PHASE B LOAD TOTAL						PHASE C LOAD TOTAL				
2929.68 VA					2668.64 VA						2942.16 VA				

LOAD TYPE	CONNECTED LOAD	DEMAND FACTOR	ESTIMATED DEMAND
HVAC	8540 VA	100.00%	8540 VA

CONNECTED LOAD SUMMARY
8540.48 VA
23.71 A
ESITMATED DEMAND LOAD SUMMARY
8540.48 VA
23.71 A

EQUIPMENT CONNECTION SCHEDULE

DESIGNATION	EQUIPMENT DESCRIPTION	ELECTRICAL CHARACTERISTICS (NOTE-1) HP	FLA	KW	VOLTAGE	PHASE	POWER SOURCE (NOTE 2)	CONNECTION TYPE (NOTE-3)	DISCONNECT SIZE (NOTE-4)	BRANCH CIRCUIT WIRING	REMARKS
MECHANICAL EQUIPMENT											
AC-1-01A	VRV FAN COIL UNIT		2 A		208 V	1	D:19,21	INTEGRAL		2#12, 1#12 G, 3/4" C	
AC-1-01B	VRV FAN COIL UNIT		2 A		208 V	1	D:14,16	INTEGRAL		2#12, 1#12 G, 3/4" C	
AC-1-02	VRV FAN COIL UNIT		2 A		208 V	1	D:18,20	INTEGRAL		2#12, 1#12 G, 3/4" C	
AC-1-03	VRV FAN COIL UNIT		2 A		208 V	1	D:23,25	INTEGRAL		2#12, 1#12 G, 3/4" C	
AC-1-04	VRV FAN COIL UNIT		2 A		208 V	1	D:22,24	INTEGRAL		2#12, 1#12 G, 3/4" C	
AC-1-05	VRV FAN COIL UNIT		2 A		208 V	1	D:27,29	INTEGRAL		2#12, 1#12 G, 3/4" C	
AC-1-06	VRV FAN COIL UNIT		0 A		208 V	1	D:26,28	INTEGRAL		2#12, 1#12 G, 3/4" C	
AC-1-07	VRV FAN COIL UNIT		2 A		208 V	1	D:1:1,3	INTEGRAL		2#12, 1#12 G, 3/4" C	
AC-1-08	VRV FAN COIL UNIT		0 A		208 V	1	D:1:2,4	INTEGRAL		2#12, 1#12 G, 3/4" C	
AC-1-09	VRV FAN COIL UNIT		2 A		208 V	1	D:1:5,7	INTEGRAL		2#12, 1#12 G, 3/4" C	
AC-1-10	VRV FAN COIL UNIT		2 A		208 V	1	D:1:6,8	INTEGRAL		2#12, 1#12 G, 3/4" C	
AC-2-01	VRV FAN COIL UNIT		2 A		208 V	1	D:1:9,11	INTEGRAL		2#12, 1#12 G, 3/4" C	
AC-2-02	VRV FAN COIL UNIT		2 A		208 V	1	D:1:10,12	INTEGRAL		2#12, 1#12 G, 3/4" C	
AC-2-03	VRV FAN COIL UNIT		2 A		208 V	1	D:1:13,15	INTEGRAL		2#12, 1#12 G, 3/4" C	
AC-2-04	VRV FAN COIL UNIT		2 A		208 V	1	D:1:14,16	INTEGRAL		2#12, 1#12 G, 3/4" C	
AC-2-05	VRV FAN COIL UNIT		2 A		208 V	1	D:1:17,19	INTEGRAL		2#12, 1#12 G, 3/4" C	
AC-2-06	VRV FAN COIL UNIT		2 A		208 V	1	D:1:18,20	INTEGRAL		2#12, 1#12 G, 3/4" C	
AC-2-07	VRV FAN COIL UNIT		2 A		208 V	1	D:1:21,23	INTEGRAL		2#12, 1#12 G, 3/4" C	
AC-2-08	VRV FAN COIL UNIT		2 A		208 V	1	D:1:22,24	INTEGRAL		2#12, 1#12 G, 3/4" C	
AC-2-09	VRV FAN COIL UNIT		2 A		208 V	1	D:1:25,27	INTEGRAL		2#12, 1#12 G, 3/4" C	
AC-2-10	VRV FAN COIL UNIT		2 A		208 V	1	D:1:26,28	INTEGRAL		2#12, 1#12 G, 3/4" C	
AC-2-11	VRV FAN COIL UNIT		2 A		208 V	1	D:1:29,31	INTEGRAL		2#12, 1#12 G, 3/4" C	
AC-2-12	VRV FAN COIL UNIT		2 A		208 V	1	D:1:30,32	INTEGRAL		2#12, 1#12 G, 3/4" C	
AC-2-17A	VRV FAN COIL UNIT		2 A		208 V	1	D:1:33,35	INTEGRAL		2#12, 1#12 G, 3/4" C	
AC-2-17B	VRV FAN COIL UNIT		2 A		208 V	1	D:1:34,36	INTEGRAL		2#12, 1#12 G, 3/4" C	
AC-2-17C	VRV FAN COIL UNIT		2 A		208 V	1	D2:25,27	INTEGRAL		2#12, 1#12 G, 3/4" C	
AC-2-20	VRV FAN COIL UNIT		2 A		208 V	1	D2:26,28	INTEGRAL		2#12, 1#12 G, 3/4" C	
AC-2-24	VRV FAN COIL UNIT		4 A		208 V	1	D2:30,32	INTEGRAL		2#12, 1#12 G, 3/4" C	
AC-2-38	VRV FAN COIL UNIT		4 A		208 V	1	D2:33,35	INTEGRAL		2#12, 1#12 G, 3/4" C	
AC-3-01	VRV FAN COIL UNIT		3 A		208 V	1	D2:1,3	INTEGRAL		2#12, 1#12 G, 3/4" C	
AC-3-02	VRV FAN COIL UNIT		2 A		208 V	1	D2:2,4	INTEGRAL		2#12, 1#12 G, 3/4" C	
AC-3-03	VRV FAN COIL UNIT		2 A		208 V	1	D2:5,7	INTEGRAL		2#12, 1#12 G, 3/4" C	
AC-3-04	VRV FAN COIL UNIT		2 A		208 V	1	D2:6,8	INTEGRAL		2#12, 1#12 G, 3/4" C	
AC-3-05	VRV FAN COIL UNIT		3 A		208 V	1	D2:9,11	INTEGRAL		2#12, 1#12 G, 3/4" C	
AC-3-06	VRV FAN COIL UNIT		2 A		208 V	1	D2:10,12	INTEGRAL		2#12, 1#12 G, 3/4" C	
AC-3-07	VRV FAN COIL UNIT		2 A		208 V	1	D2:13,15	INTEGRAL		2#12, 1#12 G, 3/4" C	
AC-3-08	VRV FAN COIL UNIT		2 A		208 V	1	D2:14,16	INTEGRAL		2#12, 1#12 G, 3/4" C	
AC-3-09	VRV FAN COIL UNIT		2 A		208 V	1	D2:17,19	INTEGRAL		2#12, 1#12 G, 3/4" C	
AC-3-10	VRV FAN COIL UNIT		2 A		208 V	1	D2:18,20	INTEGRAL		2#12, 1#12 G, 3/4" C	
AC-3-14A	VRV FAN COIL UNIT		2 A		208 V	1	D2:21,23	INTEGRAL		2#12, 1#12 G, 3/4" C	
AC-3-14B	VRV FAN COIL UNIT		2 A		208 V	1	D2:22,24	INTEGRAL		2#12, 1#12 G, 3/4" C	
AC-3-21	VRV FAN COIL UNIT		3 A		208 V	1	D2:29,31	INTEGRAL		2#12, 1#12 G, 3/4" C	
AC-4-01	VRV FAN COIL UNIT		2 A		208 V	1	PANEL B1:17,19	INTEGRAL		2#12, 1#12 G, 3/4" C	
AC-4-02	VRV FAN COIL UNIT		2 A		208 V	1	PANEL B1:6,8	INTEGRAL		2#12, 1#12 G, 3/4" C	
AC-4-03	VRV FAN COIL UNIT		2 A		208 V	1	PANEL B1:9,11	INTEGRAL		2#12, 1#12 G, 3/4" C	
AC-4-04	VRV FAN COIL UNIT		2 A		208 V	1	PANEL B1:1,3	INTEGRAL		2#12, 1#12 G, 3/4" C	
AC-4-05	VRV FAN COIL UNIT		2 A		208 V	1	PANEL B1:2,4	INTEGRAL		2#12, 1#12 G, 3/4" C	
AC-4-06	VRV FAN COIL UNIT		2 A		208 V	1	PANEL B1:10,12	INTEGRAL		2#12, 1#12 G, 3/4" C	
AC-4-07	VRV FAN COIL UNIT		2 A		208 V	1	PANEL B1:13,15	INTEGRAL		2#12, 1#12 G, 3/4" C	
AC-4-10	VRV FAN COIL UNIT		0 A		208 V	1	PANEL B1:5,7	INTEGRAL		2#12, 1#12 G, 3/4" C	
AC-4-23	VRV FAN COIL UNIT		2 A		208 V	1	PANEL B1:18,20	INTEGRAL		2#12, 1#12 G, 3/4" C	
AC-4-24	VRV FAN COIL UNIT		0 A		208 V	1	PANEL B1:14,16	INTEGRAL		2#12, 1#12 G, 3/4" C	
CU-1	CONDENSING UNIT		2 A		480 V	1	MDP:20,22,24	DISCONNECT	200A/3P/F/3R	3#1, 1#1 N, 1#6 G, 1-1/2" C	
DOAS-1	DEDICATED OUTDOOR AIR		7 A		480 V	3	MDP:19,21,23	DISCONNECT	INTEGRAL	3#12, 1#12 G, 3/4" C	
EF-1	EXHAUST FAN	3			480 V	3	MDP:14,16,18	DISCONNECT	30A/3P/INF	3#12, 1#12 G, 3/4" C	EXHAUST FAN LOCATED IN ATTIC. REFER TO MECHANICAL DRAWINGS FOR MORE INFORMATION.
GEF-1	VRV FAN COIL UNIT		6 A		120 V	1	PANEL B1:22	DISCONNECT	30A/3P/INF	3#12, 1#12 G, 3/4" C	
GSF-1	VRV FAN COIL UNIT		1 A		120 V	1	PANEL B1:21	DISCONNECT	30A/3P/INF	3#12, 1#12 G, 3/4" C	
H-1	HUMIDIFIER		26 A		480 V	3	MDP:25,27,29	INTEGRAL		3#12, 1#12 G, 3/4" C	
H-2	HUMIDIFIER		26 A		480 V	3	MDP:26,28,30	INTEGRAL		3#12, 1#12 G, 3/4" C	
H-3	HUMIDIFIER		26 A		480 V	3	MDP:31,33,35	INTEGRAL		3#12, 1#12 G, 3/4" C	
H-4	HUMIDIFIER		26 A		480 V	3	MDP:32,34,36	INTEGRAL		3#12, 1#12 G, 3/4" C	
ODU-1	CONDENSING UNIT		62 A		208 V	3	D:1:3,5	DISCONNECT	60A/3P/F/3R	3#1, 1#1 N, 1#6 G, 1-1/2" C	
ODU-2:A	CONDENSING UNIT		60 A		208 V	3	D:2,4,6	DISCONNECT	60A/3P/F/3R	3#1, 1#1 N, 1#6 G, 1-1/2" C	
ODU-2:B	CONDENSING UNIT		62 A		208 V	3	D:7,9,11	DISCONNECT	200A/3P/F/3R	3#1, 1#1 N, 1#6 G, 1-1/2" C	
ODU-3:A	CONDENSING UNIT		92 A		208 V	3	D:8,10,12	DISCONNECT	200A/3P/F/3R	3#1, 1#1 N, 1#6 G, 1-1/2" C	
ODU-3:B	CONDENSING UNIT		92 A		208 V	3	D:13,15,17	DISCONNECT	200A/3P/F/3R	3#1, 1#1 N, 1#6 G, 1-1/2" C	
REF-1	EXHAUST FAN	3/4			208 V	1	(EX) B1:26,28	INTEGRAL		3#12, 1#12 G, 3/4" C	

EQUIPMENT CONNECTION SCHEDULE NOTES:

1. ELECTRICAL CHARACTERISTICS:
   - HP: HORSEPOWER (F = FRACTIONAL HP)
   - FLA: FULL LOAD AMPS
   - KW: KILOWATTS
   - PH: PHASE
2. REFER TO ONE-LINE DIAGRAMS FOR BRANCH CIRCUIT WIRING NOT INDICATED IN SCHEDULE. REFER TO ELECTRICAL EQUIPMENT SCHEDULES FOR CIRCUIT OCPD SIZE.
3. EQUIPMENT CONNECTION TYPES:
   - DP: DUPLEX PUMP SYSTEM WITH CONTROLLER PROVIDED UNDER DIVISION 23. PROVIDE CONNECTION TO CONTROLLER AND CONNECTIONS FROM CONTROLLER TO PUMPS IN ACCORDANCE WITH THE CONTROLLER MANUFACTURER'S INSTALLATION INSTRUCTIONS. PROVIDE CONNECTIONS FOR LOCAL CONTROLS AND ALARMS IN ACCORDANCE WITH THE CONTROLLER MANUFACTURER'S INSTALLATION INSTRUCTIONS.
   - FR: FRACTIONAL HORSEPOWER SINGLE-PHASE MOTOR. PROVIDE THERMAL OVERLOAD/DISCONNECT SWITCH AND MOTOR CONNECTION.
   - FWS: EQUIPMENT FURNISHED WITH STARTER. INSTALL STARTER AND PROVIDE CONNECTION TO STARTER AND CONNECTION FROM STARTER TO EQUIPMENT.
   - M: MOTOR WITH COMBINATION STARTER AND DISCONNECT SWITCH PROVIDED UNDER DIVISION 23. PROVIDE MOTOR CONNECTION.
   - SPC: SINGLE POINT CONNECTION. PROVIDE SINGLE POINT CONNECTION TO EQUIPMENT PROVIDED WITH FACTORY MOUNTED STARTER/CONTROLLER WITH INTEGRAL DISCONNECT
   - VFD: VARIABLE FREQUENCY DRIVE WITH INTEGRAL DISCONNECT SWITCH FURNISHED UNDER DIVISION 23. INSTALL VFD AND PROVIDE CONNECTION TO VFD AND CONNECTION FROM VFD TO EQUIPMENT.
   - DISC: PROVIDE SINGLE POINT CONNECTION TO EQUIPMENT PROVIDED WITH FACTORY MOUNTED STARTER/CONTROLLER. PROVIDE FUSIBLE OR NON-FUSIBLE DISCONNECT SWITCH WITH FUSES SIZED IN ACCORDANCE WITH EQUIPMENT NAMEPLATE REQUIREMENT.
   - ELEV: CONNECTIONS SHOWN ON DRAWINGS. COORDINATE WITH ELEVATOR MANUFACTURER PRIOR TO INSTALLATION.
   - C&P: CORD AND PLUG CONNECTED. COORDINATE PLUG TYPE WITH THE APPROVED EQUIPMENT SUBMITTAL.
4. DISCONNECT SIZES:
   - TOGGLE: THERMAL OVERLOAD, TOGGLE TYPE DISCONNECT SWITCH.
   - 60/3/NF/3R: SIZE/POLES/FUSE (NF = NON-FUSED, F" = FUSE SIZE AND TYPE PER EQUIPMENT MANUFACTURER)/ ENCLOSURE TYPE IF OTHER THAN NEMA 1.
   - MCS: REFER TO "MOTOR CONNECTION SCHEDULE".
   - INTEGRAL: DISCONNECTING MEANS IS INTEGRAL WITHIN EQUIPMENT CONTROLLER. PROVIDE ADDITIONAL DISCONNECTING MEANS IF REQUIRED PER CODE OR BY EQUIPMENT MANUFACTURER.
5. REFER TO "WIRING SCHEDULE - COPPER CONDUCTORS(0-600V)" SCHEDULE AMD "WIRING SCHEDULE - COPPER CONDUCTORS (0-600V, 1-PHASE)" SCHEDULE FOR ADDITIONAL INFORMATION.

KEY NOTES

1 GROUND TRANSFORMER TO MAIN GROUND BAR LOCATED IN MAIN ELECTRICAL ROOM ON LEVEL 1.

GENERAL NOTES

A. PROVIDE UPDATED, TYPE WRITTEN CIRCUIT DIRECTORY FOR ALL CIRCUITS WITH LOAD DEFINITIONS FOR EACH PANELBOARD. DIRECTORY SHALL BE LOCATED INSIDE PANEL DOOR.
B. THE AIC RATING FOR NEW BRANCH CIRCUIT BREAKERS INSTALLED IN EXISTING PANELBOARDS SHALL MATCH EXISTING CIRCUIT BREAKERS WITHIN ASSOCIATED PANEL.
C. BRANCH CIRCUITS NOTED AS "EX" ARE EXISTING TO REMAIN. ELECTRICAL LOADS FOR EXISTING CIRCUITS WERE ASSIGNED USING EXISTING DRAWINGS OR USING CONSERVATIVE VALUES BASED ON ENGINEERING ASSUMPTION.
D. BRANCH CIRCUIT BREAKERS LEFT UNCONNECTED AS PART OF RENOVATION SHALL REMAIN AS SPARE.

WSP USA Buildings Inc.
3340 Peachtree Road, NE,
Suite 1100
Atlanta, GA 30326
(404) 815-4152
wsp.com

HLGstudio
1401 Peachtree St.
Suite 200
Atlanta, Georgia 30309
404.760.7788
404.760.7787 - Fx.
www.HLGstudio.com

SHEAR STRUCTURAL
931 Monroe Dr.
Suite A102-491
Atlanta, GA 30308
(678) 664-8051
Shearstructural.com

Grady Legal Hall HVAC Modifications and Health Equity Suite Renovation
36 Jesse Hill Jr. Dr. SE
Atlanta, Georgia

PROJECT NORTH

Issue	Date & Description	By
03/18/2025	ISSUED FOR CONSTRUCTION	

Drawn by DP
Reviewed by LR

Seal/Signature

GEORGIA REGISTERED PROFESSIONAL ENGINEER LEE K. ROBERSON 3/18/2025

Project
GRADY LEGAL HALL HVAC MODIFICATIONS AND HEALTH EQUITY SUITE RENOVATION

Project Number

Sheet Title
ELECTRICAL SCHEDULES

Scale
N/A

Sheet Number
E.801

3/27/2025 4:12:51 PM Autodesk Docs://Grady Legal Hall/WSP-Grady Legal Hall-ELEC.rvt